DRAFT SPECIFICATION

FOR

SMPS BASED INTEGRATED POWER SUPPLY

VERSION 3.0

Number of Pages 58

SPECIFICATION NO. RDSO/SPN/165/2012

SIGNAL DIRECTORATE

RESEARCH, DESIGNS & STANDARDS ORGANISATION

LUCKNOW - 226011

DOCUMENT DATA SHEET			
Designation **RDSO/SPN/165/2012**			Version 3.0
Title of Document **SMPS based Integrated Power Supply (IPS)**			
Authors: Name: Shri T.K. Khare Designation: **Jt. Director / Signal**			
Approved by: Name: Shri Mahesh Mangal Designation: **Sr. Executive Director/Signal, RDSO**			
Abstract This document defines specification of SMPS based Integrated Power Supply (IPS)			

DOCUMENT CONTROL SHEET

Designation	Organization	Function	Level
Jt. Director/Signal	RDSO	Member	Prepare
Sr.ED/ED/Signal	RDSO	-	Approval

AMENDMENTS

Version	Chapter/ Annexes	Amendments	Issue date
Ver.1.0		First issue RDSO/SPN /165/2000	January 2000
Amendment 1	Certain Clauses modified/ amended /included for typographical errors, regrouping/inclusion of tests and other technological requirements etc.		November 2000
Amendment 2	Clause 4.27 4.27.1 and 5.1.25 included/modified for incorporating provisions for lightning & surge devices and battery charging	Modified / added.	April 2002
Ver. 2.0	(i)Clause 2.1, 3.3, 3.4, 3.5, 3.7, 4.5, 4.21, 5.1.1,5.4.10 included/amended in view of the approval of RB on the recommendations of 77th SSC. (ii) Clause 2.3, 3.6, 3.9.2, 3.10.1, 3.14, 4.1, 4.25, 4.30, 5.1.4, 5.1.19, 5.1.24.3, 5.2.4, 5.3.24, 5.4.8, 5.4.12, 8.4 included / amended in view of the field problems and RB approval on recommendation of 9th MSG. (iii) Clause 4.12, 4.22, 4.28, 4.29, 5.1.6, 5.1.16, 5.1.17, 5.1.28.6, 5.2.15, 5.4.13, 5.4.17, 5.5.26, 6.0, 5.6.3, 5.7.2, 5.8.3, 10 modified/included for typographical errors / re-grouping / inclusion of various tests, incorporating provisions of manuals and up-gradation of technology.	Revision and issue RDSO/SPN/165/2004	June 2004
Amendment 1	Nomenclature for Alarms and indications in clause 4.1.23.1, 4.2.4.1, 4.2.4.2, 4.3.9, 4.5.5, 4.6.13, 4.8.1 has been standardised.	Modified	March 2005
Amendment 2	Severities for Change in Temperature cycle, Dry heat & Cold test (Clause 10.7.1) has been modified.	Modified	March 2005
Amendment 3	Cl. no. 3.1.5, 3.2.2, 3.2.3, 4.1.16, 4.3.8, 4.3.14, 9.2(f), 9.3.1(j), 10.7.1 & Annexure 1 (SN 3) has been modified to increase the system reliability. New clause 3.3.16 has been added to provide ventilation for individual modules. Clause 9.2 has been deleted.	Modified/Added/ Deleted	May 2005
Amendment 4	Clause 2.1, 2.2.4, 3.3.1, 3.3.4, 3.12.1, 3.13.2, 3.14, 4.5.7, 4.8.1, 6.9 & 10.2 modified for renumbering of Annexures, design improvement in DC-DC Converter and incorporation of version control.	Modified/Added	July 2005
Amendment 5	Cl. 3.12 related to Class B,C & D type Lightning & Surge Protection modified	Modified	Jan 2006

AMENDMENTS

Version	Chapter/ Annexes	Amendments	Issue date
Ver. 3.0		Modified and issued as RDSO/SPN/165/2012.	January 2012

TABLE OF CONTENTS

Para No.	Item	Page No.
	Abbreviations used	7
0.	Foreword	8
1.0	Objective & Scope	8
2.0	General Requirements	9-10
3.0	Technical Requirements	11-18
4.0	Performance Requirements	18-34
5.0	Indenting Description / Information to be supplied by the Purchaser	34-35
6.0	Labeling and Marking	35-36
7.0	Documentation	36
8.0	Packing	36-37
9.0	Test and Requirements	37-38
10.0	Test Procedure	39-43
11.0	Sampling Procedure for Acceptance Test	43
Annexure-1	Details of tools in tool kit with IPS	44
Drg. No. SDO/IPS/PI-4L/NRE/001 (Annexure II-A)	IPS for up to 4 lines without AFTC Non- RE Area	45
Drg. No. SDO/IPS PI-4L/RE/002 (Annexure II-B)	IPS for up to 4 lines without AFTC RE Area	46
Drg. No. SDO/IPS/PI-6L/NRE/003 (Annexure II-C)	IPS for up to 6 lines without AFTC Non-RE Area	47
Drg. No. SDO/IPS /PI-6L/RE/004 (Annexure II-D)	IPS for up to 6 lines without AFTC RE Area	48
Drg. No. SDO/IPS/PI-10L/005 (Annexure II-E1)	IPS (Internal) for Medium size stations in RE/NRE area	49
Drg. No. SDO/IPS/PI-10L/006 (Annexure II-E2)	IPS (external) for Medium size stations in RE/NRE area	50
Drg. No. SDO/IPS/LC/007 (Annexure II-F)	Power supply arrangement with IPS for interlocked LC gate in RE/ Non RE area	51
Drg. No. SDO/IPS/IBS/008 (Annexure II-G)	IPS configuration for IBS in RE/ Non RE area	52
Annexure-III	Details of the standard modules for use in IPS	53
Annexure-IV	List of spares to be supplied with IPS	54
Drg. No. SDO/IPS/PI/Layout/007 (Annexure-V)	Layout of IPS cabinets	55
Annexure-VI	Sources of components other than semiconductor devices for power supply equipments	56-57
Annexure-VII	Earthing & Bonding arrangement for indoor signalling equipment	58

ABBREVIATIONS USED

Abbreviation	Detail
AFTC	Audio Frequency Track Circuit
AVR	Automatic Voltage Regulator
AMF Panel	Auto Mains Failure Panel
ASM	Assistant Station Master
ACDP	AC Distribution Panel
DSA	Distribution Switching & Alarm Unit
DG Set	Diesel Generator Set
DCDP	DC Distribution Panel
DOD	Depth of Discharge
EI	Electronic Interlocking
EMI	Electromagnetic Interference
FRBC	Float Rectifier Cum Boost Charger
IPS	Integrated Power Supply
IS/IEC	Indian Standard/ International Electrotechnical Commission
LCD	Liquid Crystal Diode
LED	Light Emitting Diode
MTBF	Mean Time Between Failure
MOV	Metal Oxide Varistors
OEM	Original Equipment Manufacturer
PI	Panel Interlocking
PF	Power Factor
PWM	Pulse Width Modulation
RE	Railway Electrification
RFI	Radio Frequency Interference
SMPS	Switch Mode Power Supply
SPD	Surge Protection Devices
VRLA	Valve Regulated Lead Acid

GOVERNMENT OF INDIA
MINISTRY OF RAILWAYS
(RDSO)
INDIAN RAILWAY SPECIFICATION
FOR
SMPS BASED INTEGRATED POWER SUPPLY SYSTEM (IPS)
FOR
SIGNALLING INSTALLATIONS ON INDIAN RAILWAYS

(RDSO/SPN/165/2012, Version 3)

0. FOREWORD

0.1 This specification is issued with the fixed serial number followed by the year of adoption as standard or in case of revision, the year of latest revision.

0.2 This specification is intended chiefly to cover the technical provisions and does not include the necessary provisions of a contract.

0.3 This specification requires reference to following specifications:

IRS: S 88/2004	Low Maintenance Lead Acid Battery
IRS:S 93/96(A)	Valve Regulated Lead Acid Sealed Maintenance Free Stationary Battery
RDSO/SPN/144/2006	Safety & reliability requirements of electronic signalling equipment.
IS:9000	Basic environmental testing procedure for electronic and electrical item
IRS:S 23	Electrical Signalling & Interlocking Equipment.
IEC-61643	Surge Protective Devices connected to low-voltage power distribution systems
EN 55022	European Standard for Information Technology Equipment
MIL HBDK 217F	Military hand book "Reliability Prediction of Electronic Equipment"
IEC 61312	Protection against Lightning Electromagnetic Impulse
IEC 61024	Protection of structures against Lightning
IRS:S 74/89 with latest amendment	Voltage Regulator-Ferro Resonant
EN 50129	Railway Application Safety Related Electronic System For Signalling

0.4 Wherever, in this specification, any of the above mentioned specifications is referred by number only without mentioning the year of issue, the latest issue of that specification is implied.

1. OBJECTIVE & SCOPE

1.1 This specification covers the technical requirements of SMPS based integrated power supply system (IPS) suitable for wayside and medium size signalling installations without AFTC (upto 15KVA signalling load) in RE & Non-RE areas.

1.2 The IPS system is suitable to work with either Low Maintenance cells as per IRS: S 88/2004 or with VRLA Maintenance Free cells as per IRS: S 93/96(A).

2. GENERAL REQUIREMENTS

2.1 The SMPS based Integrated Power Supply (IPS) system is meant to give continuous supply to both AC & DC signalling circuits for wayside and medium size signalling installations without AFTC (upto 15KVA signalling load) in RE & Non-RE areas. The SMPS based IPS system consists of the following:

2.1.1 SMPS based Float cum Boost Charger (FRBC) Panel

This panel consists of FRBC (float rectifier cum boost charger) module, Distribution/ Supervisory control / Alarm (DSA) unit and metering section.

2.1.2 AC Distribution Panel

This cabinet consists of Inverters, Ferro-Resonant based Automatic Voltage Regulator (AVR), Transformers and metering section.

2.1.3 DC Distribution Panel

This panel consists of all DC-DC converters and common Digital voltmeter for measurement.

2.1.4 Status Monitoring Panel for ASM's Room

This panel consists of status indications and critical alarms of IPS to be provided in ASMôs room. The monitoring panel shall be of wall mounting type. OEM shall supply 12 core, 1.5 sq.mm signalling cable as per IRS:S 63/2007 for connecting IPS to Status Monitoring Panel in Station Masterôs room (distance to be given by Railways at the time of indenting).

2.1.5 Battery Bank

IPS system is suitable for charging 110V battery bank of Low Maintenance cells as per IRS:S 88/2004 or VRLA Maintenance free cells as per IRS:S 93/96(A). Battery bank is part of this specification and the same shall be supplied and commissioned along with IPS. Manufacturers shall give an undertaking regarding use of battery grade acid as per IS 266:1993 and de-mineralised / distilled water as per IS 1069:1993 for initial charging.

2.1.6 Battery racks (MS) for VRLA batteries / wooden rack for low maintenance batteries, along with its accessories duly approved by purchaser, shall also be supplied with battery bank.

2.1.7 The battery is to be installed in a separate room. Low Maintenance batteries are to be charged at the site by OEM for which power supply shall be arranged by Railways. A test certificate of initial charging/capacity testing shall be submitted by OEM to Railways.

2.1.8 OEM shall supply copper cable of suitable dia as per IS: 694 and grade 1100V for connecting IPS to Battery bank (distance to be given by Railways at the time of indenting) as given below ï

a) For 120AH battery ï 10Sq.mm
b) For 200AH battery ï 16 Sq.mm
c) For 300AH battery ï 25 sq.mm

2.1.9 A tool kit containing tools as detailed in Annexure-I required for maintenance of IPS shall be supplied along with IPS and shall be placed inside the IPS rack in a suitable bag.

2.1.10 An exhaust fan of 12òsize (minimum) shall be supplied for the IPS room by the OEM. The exhaust fan shall run with commercial AC supply. Railways shall ensure installation & commissioning of the exhaust fan.

2.2 Typical Configurations

2.2.1 Typical configuration of IPS for wayside & medium size PI /EI station upto 4/6/10 lines, LC gate & IBS location in RE & Non-RE are enclosed as Annexure II. Details of the configurations are given below-

SN	IPS configuration	Drawing no.	Annexure No.
1	Upto 4 line wayside station without AFTC in Non RE area	SDO/IPS/PI-4L/NRE/001	Annexure-IIA
2	Upto 4 line wayside station without AFTC in RE area	SDO/IPS/PI-4L/RE 002	Annexure-IIB
3	For 4-6 line wayside station without AFTC in Non RE area	SDO/IPS/PI-6L/NRE 003	Annexure-IIC
4	For 4-6 line wayside station without AFTC in RE area	SDO/IPS/PI-6L/RE 004	Annexure-IID
5	For 6-10 lines medium size station without AFTC in RE/Non RE area (signalling load upto 15KVA)	IPS Internal - SDO/IPS/PI-10L/ 005 IPS External - SDO/IPS/PI-10L/006	Annexure-IIE/1 & Annexure-IIE/2
6	For interlocked LC gate in RE/ Non RE area.	SDO/IPS/LC/007	Annexure-IIF
7	For IBS location in RE/Non RE area.	SDO/IPS/IBS/008	Annexure-IIG

2.2.2 Depending upon the requirement at the station, purchaser can give any alternate configuration using standard modules and ensuring that it meets the overall design of input and output. The details of standard modules are given at Annexure-III.

2.2.3 The DC-DC converter for Axle Counters & EI are optional. Purchaser has to specify whether optional DC-DC converters are required or not. In all cases, the distribution cabinet shall have provision for accommodation of optional DC-DC converters.

2.2.4 For 60V operated metal to metal relay installation, the ratings of DC-DC converter for relay internal & relay external shall be 60-66V /5A in lieu of 24-32V /5A modules.

2.2.5 A set of spares shall also be supplied along with IPS. List of spares is enclosed as Annexure-IV. All the spare modules shall be accommodated in the IPS rack as cold standby. Other spares shall be supplied along with IPS and shall be placed with IPS in a suitable bag/ box.

2.3 **Indoor Environmental condition**

The SMPS based IPS system is intended for use in most tropical climate in India where the maximum ambient temperature may reach upto 50ºC with relative humidity reaching upto 95%.

3.0 TECHNICAL REQUIREMENTS

3.1 Electrical Requirements

3.1.1 The IPS shall be suitable for operation for a nominal input voltage of 230V AC, 50Hz single phase power supply derived from Electricity Board or Railway Traction supply or 7.5/10/15 KVA diesel generator set with AMF control of appropriate quality. The system shall work satisfactorily with input voltage variation from 150 to 275V AC and frequency variation from 48Hz to 52 Hz.

3.1.2 It shall be ensured by Railway that the capacity of AC input feeder installed at the station is adequate as per the signalling load catered by IPS. All the switchgear and cables shall be adequately rated and shall be of approved makes.

3.1.3 The DG Set used for feeding IPS shall be capable of taking 10% overload for period of one hour during any 12-hour period. It should be ensured that waveform of DG set is near sine wave.

3.1.4 The accidental short circuit at input feeder shall not cause any interruption to the IPS sub system. The accidental over voltage shall not cause any damage to IPS system.

3.1.5 There shall be an automatic arrangement for disconnecting the mains within 500 ms to the rack whenever the input voltage is beyond the specified operating limits with suitable alarm indication. The IPS shall resume normal working automatically when the input is restored within the working limits. A self storing type static switch should be provided at the input.

3.2 **Module replacement time and MTBF**

3.2.1 The mean time to replace a faulty module of IPS shall be less than 20 minutes.

3.2.2 The designed MTBF of FRBC, Inverter, DC-DC Converter, Supervisory control unit & ASM Panel shall not be less than 35,000 hours.

3.2.3 The DC fan provided at rack /module level should have MTBF better than 70,000 hours at 40°C. The fan shall be covered with grill.

3.3 Construction

3.3.1 The individual cabinets shall be within the overall dimensions of 2000-mm max. Height 750 mm. max. Depth and 750 mm max. Width. In case all DC-DC Converter modules cannot be accommodated in one DC distribution panel, then a second DC distribution panel shall be provided

instead of making oversized panel. The height and depth of all cabinets shall be of equal size. Each cabinet will have min 10-mm thick anti-vibrating pad and 75 mm x 5-mm bottom channel as per sketch no. SDO/IPS/Layout/007 at Annexure V.

3.3.2 The spares (other than modules used for redundancy) may be placed at bottom of any rack as per the availability of space.

3.3.3 The rack structure and the module frame shall be made up of rigid framework of steel profiles. The front door, if used, shall be of hinged type. The rear panel shall be provided with proper ventilation arrangement. DC fan shall be provided at rack level for forced cooling. The operation of such fan shall be continuous.

3.3.4 The racks and module cabinets shall be of robust construction. They shall be housed in self-supporting cubicles made of cold rolled closed annealed mild steel sheet of thickness not less than 1.6mm. The rack shall be adequately ventilated. The ventilating opening shall be less than 3mm size for protection against entry of lizard's etc. The rack shall conform to IP31 type of protection as specified in table 1 of specification no. IS 2147-1962.

3.3.5 The racks and the modules shall be treated with zinc chromate primer followed by electrostatic epoxy powder coating paint finished, passivation shall be done through seven stage process/sand blasting. Small metal parts such as nuts, bolts and washers shall be chrome plated. All other metal parts of the rack shall be plated for protection against corrosion.

3.3.6 The racks and the module cabinets shall be free from sharp edges & sharp corners.

3.3.7 Provision of doors are optional, the cabinet sides shall have 3mm louvers covered with wire mesh. However, if the doors are not provided, the sub system shall have proper enclosures so that any reptile/ insect shall not enter in the IPS cabinet. The magnetic latches/handle shall be provided on the doors.

3.3.8 The racks and the modules shall be designed for easy maintenance and installation.

3.3.9 Facility shall be provided at the top of the rack to connect external AC power and lightning arrestors (if provided inside the rack). Where cables pass through metal panels, suitable rubber grommets shall be provided to protect cable from damage.

3.3.10 The modules shall be of modular type. The module shall be easily mounted or removed from the front side of the rack. The module shall be designed to slide into the rack on a suitable mechanical arrangement. Suitable arrangement shall be made for pulling out each module separately. The associated AC input, DC output connection, control/alarm & interface cable connecting the module shall be disconnected/installed easily without causing any interruption/damage to supply & working module.

3.3.11 All materials and workmanship shall be of professional quality to ensure the MTBF requirements.

3.3.12 The input and output terminals shall be accessible only when the cover of the cubicle is removed. All the terminals shall be clearly, neatly and indelibly marked to correspond with the wiring diagram for easy identification.

3.3.13 Input and output connections of SMR, DC-DC converter, inverter, AVR and step down transformer shall be made using plug & socket of adequate rating having power pins with locking arrangement. The male connector shall be mounted on the device and the female connector shall be terminated on the cable. Use of terminal blocks for input and output connections is not accepted.

3.3.14 The finish of steel and panels shall conform to relevant IS specification. The colour scheme shall be as follows:

a) Rack & doors — Pebble Grey RAL 7032
b) All IPS modules — shall harmoniously match with rack colour

3.3.15 AC/DC distribution cabinet shall have proper identification marking/protection for AC/DC monitoring points to avoid any misuse and protection against any accidental short circuit.

3.3.16 Baffles to be provided at the rack level for forced ventilation of individual modules.

3.4 Components

3.4.1 Semiconductor and other components used in the equipment shall be of industrial grade with min. operating temperature range -25°C to + 85°C. Components shall conform to relevant IS/IEC specification. Resistors and capacitors shall meet relevant provisions of latest RDSO/SPN/144/2006.

3.4.2 Semi-conductor power devices and other Solid state components used in IPS shall not be operated at more than 50% of the rated maximum peak voltage and at not more than 50% of the rated maximum average current under any prevailing conditions. Manufacturer shall submit design details, components datasheet at the time of type approval.

3.4.3 The manufacturer shall declare the peak reverse voltage, current rating and working temperature of the rectifier element under ambient conditions, the number of elements used and the manner of their connection. The peak reverse voltage rating should not be less than two times the expected reverse voltage across the devices.

3.4.4 The recommended list of major components and their makes is given in Annexure-VI.

3.5 Printed Circuit Board

Printed Circuit Board shall generally conform to relevant provisions of latest RDSO/SPN/144/2006 for safety & reliability requirement of Electronic signalling equipment.

3.6 Cables & Wiring

3.6.1 All the cables and wires used for wiring and inter connections of modules shall conform to specification No. IRS: S 76-89/IS 694 of grading 1100V. Aluminium wires shall not be used. The gauge of wiring shall be such that the current density does not exceed 3 amperes/mm square.

The colour scheme employed for the rack wiring shall be as below:

AC line : Yellow
AC neutral : Black
Earthing : Green
DC positive : Red
DC negative : Black
Control wiring : Grey

3.6.2 All connections shall be made through crimped eyelets and shall be numbered with PVC cable marker rings/ inkjet printing on cables corresponding to the numbers/letters shown in the schematic wiring diagram. Soldering shall be used only where use of crimped eyelets is not possible.

3.6.3 All non-current carrying metal parts shall be bonded together and adequately earthed.

3.6.4 All wiring shall be neatly secured in position by bunching /strapping & adequately supported. Where wires pass through any part of metal panel or cover, the hole through which they pass shall be provided with rubber grommets.

3.6.5 There shall not be any exposed wiring outside the cabinet.

3.7 **Transformers and chokes**

3.7.1 Transformers and inductors/ chokes used shall be vacuum impregnated and shall be of natural air-cooled type conforming IS: 6297 (Category 3 & Grade 2). Class F or higher grade insulating material as per IS:1271 and polyester enamelled copper winding wire conforming to IS 13730(Pt. 3) shall be used for winding transformers and inductors/chokes. The gauge of winding wires shall be such that the current density shall not exceed 2A/sq.mm.

3.7.2 All exposed metal parts of the transformer including laminations shall be protected against corrosion.

3.8 Potential free contacts

3.8.1 Following potential free contacts shall be provided for extension of alarms at remote place:

a) Inverter 1 fail
b) Inverter 2 fail
c) FRBC fail
d) DC-DC converter fail
e) Mains fail
f) Call S & T staff
g) Battery low (50% Deep discharge)

3.9 Meters

3.91. Accuracy of 3 ½ D Digital meters used in the IPS cabinets shall be ± 1%, ± 3 D or better.

3.9.2 Meter shall be provided on top of the FRBC, ACDP and DCDP panel as per Sketch No. SDO/IPS/Layout/007.

3.10 Fuses & Connectors

3.10.1 All plug- in connectors shall be non-interchangeable. Connectors as per IEC 947 shall be provided.

3.10.2 Fuse holder identification shall include details of fuse rating and type.

3.10.3 All power fuses shall confirm to specification IS 13703 / IS 9224.

3.11 Noise and Vibration

3.11.1 Fully equipped rack at full load shall not contribute more than 15dB (weighted) to the ambient noise level taken as 45dBA. It shall be measured at a distance of 1 meter from the unit and 1.25 meter above the floor level in the full audio range upto 3.4 KHz. The correction factor for total noise when the ambient noise level is more than 45dBA shall be as given below:

Ambient Noise (dBA)	Correction Factor (dB)	Ambient noise (dBA)	Correction Factor (dB)
45	0	53	2.07
46	0.18	54	2.43
47	0.39	55	2.82
48	0.61	56	3.25
49	0.86	57	3.69
50	1.12	58	4.17
51	1.41	59	4.68
52	1.73	60	5.21

Note: The correction factor shall be added to the limit of 60dBA to arrive at the limit when the ambient is greater than 45dBA.

3.11.2 The IPS sub-systems shall be suitably screened and immune to any kind of EMI interference. The sub-system shall not produce any hum in the peripheral devices.

3.12 Lightning & Surge Protection

3.12.1 Stage 1 Protection (at the entry point of input 230V AC supply in the power/ equipment room)

(a) The Stage 1 protection shall consist of coordinated Class I/ B & II/ C type SPDs at the entry point of input 230V AC supply in Power /Equipment room in TT configuration in a separate wall mountable box. The Class I/B SPD shall be provided between Line to Neutral & Neutral to Earth. They shall be spark gap type voltage switching device and tested as per IEC 61643 with the following characteristics and features-

SN	Parameters	Limits	
		Between Line & Neutral	Between Neutral & Earth
1	Nominal Voltage (U_0)	230V	230V
2	Maximum continuous operating voltage (U_c)	≥ 255V	≥ 255V
3	Lightning Impulse current 10/350µs (I_{mp})	≥ 25KA	≥ 50KA
4	Response time (T_r)	≤ 100 ñs	≤ 100 ñs
5	Voltage protection level (U_p)	≤ 2.5KV	≤ 2.5KV
6	Short circuit withstand and follow up current extinguishing capacity without back up fuse (I_{sc} & I_{fi})	≥3KA	≥100A
7	Temporary Over Voltage (U_T)	334V min. for 05 secs.	1200V min. for 200ms
8	Operating temperature / RH	- 25°C to +80°C/ 95%	- 25°C to +80°C/ 95%
9	Mounted on	din rail	din rail
10	Indication	Mandatory	Optional
11	Pluggability	Optional	Optional
12	Potential free contact for remote monitoring	Optional	Optional
13	Encapsulation	Encapsulated	Encapsulated
14	Degree of protection	IP20	IP20
15	Housing	Fire retardant as per UL 94	Fire retardant as per UL 94

(b) The Class I/ B SPD will be followed by Class II/ C SPD adjacent to it and connected between Line & Neutral. The device shall be a single compact varistor of proper rating and in no case a number of varistors shall be provided in parallel. It shall be voltage clamping device, thermal disconnecting type and shall be tested as per IEC 61643 with the following characteristics and features-

SN	Parameters	Limits (between Line & neutral)
1	Nominal Voltage (U_0)	230V
2	Maximum continuous operating voltage (U_c)	≥ 300V
3	Nominal discharge current 8/20µs (I_n)	≥ 10KA
4	Maximum discharge current 8/20µs (I_{max})	≥ 40KA
5	Response time (T_r)	≤ 25 ñs
6	Voltage protection level (U_p)	≤ 1.5 KV
7	Operating temperature / RH	- 25°C to +80°C/ 95%
8	Mounted on	Din rail
10	Indication	Mandatory

SN	Parameters	Limits (between Line & neutral)
11	Pluggability	Mandatory
12	Potential free contact for remote monitoring	Mandatory
13	Degree of protection	IP20
14	Housing	Fire retardant as per UL 94

(c) Class I/B and class II/C SPDs of Stage I shall be so coordinated that the voltage protection level of the coordinated devices is ≤ 1.5 KV. As such, these devices shall be from the same manufacturer and necessary test certificate in this regard shall be submitted by the manufacturer/ supplier.

3.12.3 **Stage 2 protection (at the output side inside the distribution panel)**

The Stage 2 protection shall consist of Class II/ C type SPDs for Ó24V-110V AC/DC supplies at the output side inside the rack of IPS. These shall be provided for External circuits i.e. Relay external circuit, Axle counter circuit, point machine circuit and at Inverter output. The Class II/C type SPD shall be a single compact varistor of proper rating and in no case a number of varistors shall be provided in parallel. It shall be voltage clamping device and thermal disconnecting type. They shall be tested as per IEC 61643 with the following characteristics and features-

SN	Parameters	Limits (between L1 & L2, L1 & E , L2 & E)	
1	Nominal Voltage (U_0)	60V-110V AC/DC	24V-60V AC/DC
2	Maximum continuous operating voltage (U_c)	≥ 150 (AC) ≥ 200 (DC)	≥ 75 (AC) ≥ 100 (DC)
3	Nominal discharge current 8/20µs (I_n)	≥ 10KA	≥ 10KA
4	Maximum discharge current 8/20µs (I_{max})	≥ 40KA	≥ 40KA
5	Response time (T_r)	≤ 25 ñs	≤ 25 ñs
6	Voltage protection level (U_p)	≤ 1.0 KV	≤ 0.5 KV
7	Operating temperature / RH	- 25°C to +80°C/ 95%	- 25°C to +80°C/ 95%
8	Mounted on	Din rail	Din rail
10	Indication	Mandatory	Mandatory
11	Pluggability	Mandatory	Mandatory
12	Potential free contact for remote monitoring	Mandatory	Mandatory
13	Degree of protection	IP20	IP20
14	Housing	Fire retardant as per UL 94	Fire retardant as per UL 94

3.12.4 Length of all cable connection from SPDs to earth equi-potential busbar shall be kept less than 0.5mtrs. For this, a sub earth equi-potential busbar shall be installed at approx. 20cm from the SPD box. The details of connection of SPDs for Stage 1, & 2 of a typical installation with IPS is enclosed as Annexure-VII.

3.12.5 Batch test report of OEM should be submitted by the manufacturer /supplier of Lightning & Surge protection devices to the IPS manufacturer at the time of supply of these devices. Copy of the same shall be submitted by IPS manufacturer to RDSO at the time of acceptance test of IPS system.

3.13 **Earthing**

3.13.1 The IPS systems and its individual modules shall have earth terminals and shall be properly earthed to the IPS cabinets.

3.13.2 Zonal Railways shall provide earthing arrangement in conformity to Code of practice for earthing and Bonding RDSO/SPN/197/2008 as per details at Annexure-VII.

3.14 **Installation & Commissioning**

Installation shall be done by OEM if specified by the purchaser. However, commissioning of IPS shall be done by the OEM only. OEM shall issue a certificate of fitness of installation before commissioning. For this, Zonal Railways and OEM shall ensure the compliance to Pre-commissioning checklist issued by RDSO.

4. **PERFORMANCE REQUIREMENTS**

4.1 **SMPS BASED FLOAT CUM BOOST CHARGER (FRBC)**

4.1.1 FRBC modules of 110V/20Amp rating shall be provided as per standard configuration.

4.1.2 The number of FRBC modules as required for meeting a particular load shall be housed in (n+1) parallel configuration in a single rack where ónô is the actual required number of FRBC modules. One additional FRBC module (spare) shall be provided as a cold standby in the rack.

4.1.3 The SMPS based FRBC should be based on High Frequency (20 KHz and above) Switch Mode techniques.

4.1.4 Resettable Fuses shall be provided, wherever appropriate, to protect the module against failure of control / sensing circuit.

4.1.5 The design shall have suitable time delay / hysterisis to avoid hunting during switching ON and OFF of the system. The module shall disconnect at 150V and reconnect at 170V.

4.1.6 Switching ON and OFF the fan shall be temperature controlled.

4.1.7 In case of fan failure the module shall have automatic protection to switch off the module above 70 deg centigrade and restore automatically with reduction in temperature. It shall not cause any fire hazard. The fan shall also be protected against short circuit by providing a fuse.

4.1.8 The FRBC modules shall have forced cooling and only DC fan shall be used.

4.1.9 Screen-printed procedure for adjustment of float voltage, boost voltage, battery current limit and other adjustment required to be done in the field shall be prominently visible for ready reference of maintenance staff.

4.1.10 **Meter**

4.1.10.1 The following digital meter of 3 ½ digit with LCD/LED alphanumeric display having 12mm height shall be provided on the front door of the rack.

a) AC volt / ampere meter to read AC input voltage & current.
b) DC volt/Ampere meter to read system voltage, battery voltage, system total current and battery current.

4.1.10.2 In case of AC failure the battery discharge current shall be displayed on DC Ampere meter/ DSA with negative sign /discharge indication irrespective of selector switch.

4.1.11 **DC Output Characteristics**

The module shall be capable of operating in ñAuto Float cum-Boost chargerò mode. It shall be programmed to operate as a float rectifier or a Boost charger depending on the condition of the battery being sensed by the switching/control unit.

4.1.11.1 **Auto Float Mode**

a) Float voltage of each rectifier module shall be set as given in the following table:

No. of cells	Auto Float mode voltage		Auto Boost mode voltage	
	VRLA Cells	Conv. LA Cells	VRLA Cells	Conv. LA Cells
55	123.8V	118.25V	126.5V	133.1V

Normal Float & Boost voltage for VRLA battery is 2.25V and 2.3V/Cell respectively. For conventional battery it shall be 2.15V and 2.42V/cell, respectively. The module should have a range from

2.0 ï 2.3V/cell in float mode & 2.2 ï 2.5V/cell in boost mode to meet the requirement of VRLA as well as conventional batteries.

b) The DC output voltage shall be maintained within ± 1% of the half load pre-set voltage in the range 25% load to full load when measured at the output terminals over the full specified input range.

4.1.11.2 **Auto Boost Charge Mode**

In auto boost charge mode, FRBC shall supply battery and equipment current till terminal voltage reaches 2.3V (VRLA battery) /2.42V (Low Maintenance battery) per cell.and shall change over to Auto Float mode after a defined delay of 0, 1, 2, 4 hours adjustable, to be set as per battery manufacturerôs specification.

4.1.12 **Efficiency**

The efficiency and Power factor of the FRBC in auto float and auto boost mode shall be as follows:

Description	Nominal input, output & full rated load		150-275V input, 25% to 100% load	
	Efficiency %	PF	Efficiency %	PF
110V / 20A	>90	>0.95 to unity	>85	>0.9

Note: Active power factor correction circuit shall be adopted.

4.1.13 **Total Harmonic Distortion**

4.1.13.1 The total line harmonic voltage distortion shall not be more than 10%.

4.1.13.2 The total current harmonic distortion contributed by FRBC at the input shall not exceed 10% for all input condition and load 50% to 100% of the rated capacity.

4.1.14 **Current Limiting (Voltage Droop)**

4.1.14.1 The current limiting (Voltage Droop) shall be provided for Float/Boost Charge operation. The float/boost charge current limiting shall be continuously adjustable between 50 to 100% of rated output current between 2.0 V to 2.5 V/cell.

4.1.14.2 The float and boost charge current limit adjustment shall be provided on the front panel.

4.1.15 The FRBC modules shall be fully protected against short circuit. It shall be ensured that short circuit does not lead to any fire hazard. It shall resume normal function automatically after the short is removed. The maximum short circuit current shall not exceed 105% of their rating and there shall not be any damage to the module.

4.1.16 Battery path current shall be automatically controlled by the input current in such a way that input current shall not exceed the set limit. The set limit shall be adjustable anywhere between 75 to 100% of full load input current. Provision shall also be made for full utilization of power when DG set is operated.

4.1.17 **Soft Start Feature**

4.1.17.1 Slow start circuitry shall be employed such that FRBC module output voltage shall reach its nominal value slowly within 10 to 20 seconds, eliminating all starting surges.

4.1.17.2 The maximum instantaneous current during start up shall not exceed the peak value of the rectifier-input current at full load at the lowest input voltage specified.

4.1.18 **Voltage Overshoot/Undershoot (with battery disconnected)**

4.1.18.1 The FRBC modules shall be designed to minimise output voltage overshoot/undershoot such that when they are switched ON, the DC output voltage shall be limited to ± 5% of the set voltage and return to its steady state within 20 millisecond for any load of 25% to 100%.

4.1.18.2 The DC output voltage overshoot for a step change in AC mains from 150V to 275V shall not cause shut down of FRBC module and the voltage overshoot shall be limited to ±5% of its set voltage and return to steady state within 20ms.

4.1.18.3 The modules shall be designed such that a step load change of 25% to 100% or vice- versa shall not result in DC output voltage overshoot/undershoot of not more than ±5% of the set value and return to steady state value within 10 millisecond without resulting the unit to trip.

4.1.19 **Electrical Noise**

4.1.19.1 The FRBC module shall be provided with suitable filter on the output side.

4.1.19.2 A resistor shall be provided to discharge the capacitors after the FRBC module has stopped operation and the output is isolated.

4.1.19.3 The psophometric noise (e.m.f. Weighted at 800 Hz) ,with a battery of appropriate capacity connected across the output should be within 5 mV, while delivering the full rated load at nominal input (230V single-phase supply). For test purpose this shall be taken as equivalent to 10mV when the battery is not connected.

4.1.19.4 The peak- to- peak ripple voltage at the output of the rectifier module without battery connected shall not exceed 300 mV at the switching frequency measured by a storage oscilloscope of 50-60 MHz band-width.

4.1.20 **Radio Frequency Interference Suppression**

The SMPS charger shall be designed to minimise the level of Electromagnetic Interference (EMI/RFI), both conducted & radiated, in the vicinity of SMPS charger. The radiated & conducted noise shall be within the limits specified in International specification no. IEC CISPR 22 óAô The firm shall submit certificate to this effect from accredited national/international test house at the time of type test.

4.1.21 **Parallel Operation**

4.1.21.1 The FRBC modules shall be suitable for operating in parallel on active load sharing basis with one or more modules of same type, make and rating.

4.1.21.2 The current sharing shall be within ± 10% of the individual capacity of each FRBC in the system when loaded between 50 to 100% of its rated capacity.

4.1.22 **Protection**

4.1.22.1 DC Over Voltage Protection: In case output DC voltage exceeds 2.37V/2.5V per cell respectively for VRLA/ low maintenance battery, the over voltage protection shall operate & shut off the faulty module. This shut off can be restored through reset push button, which shall be provided on the DSA/ front panel of FRBC module.

4.1.22.2 Shutting-off faulty FRBC module shall not affect the operation of other FRBCs operating in the rack.

4.1.22.3 The circuit design shall ensure protection against the discharge of the battery through FRBC module. In any case, the discharge current i.e. reverse leakage current, shall not be more than 100 mA .

4.1.22.4 The over voltage protection circuit failure shall not cause any safety hazard.

4.1.22.5 Fuse / circuit breakers shall be provided for each FRBC module as below

a) Live AC input line: Class ñCòtype MCB as per IS. 13947
b) DC output: HRC fuse / MCB

4.1.23 **Alarms & Indication of FRBC**

4.1.23.1 The following indications, controls & measuring points shall be provided on the front panel of FRBC

A) Status Indication:

Description	Nomenclature	Indication
a) FRBC on Auto Float mode	FLOAT	Green
b) FRBC on Boost Charge mode	BOOST	Green
c) Mains available	MAINS	Amber

B) Alarm Indication:

Description	Nomenclature	Indication
a) Rectifier module over voltage	OVER VOLTAGE	Red
b) Rectifier module under-voltage	UNDER VOLTAGE	Red
c) DC output fail	OUTPUT FAIL	Red
d) FRBC Overload/ short circuit	OVERLOAD/ SHORT CIRCUIT	Red
e) Fan fail	FAN FAIL	Red

Note: ñProvision shall be made for stopping the audio alarm with a non-locking push button.

C) Control Potentiometers/ through DSA:

a) Float voltage adjustment (float)
b) Boost voltage adjustment (boost)
c) Overload current setting (OL)

D) Digital ammeter of 3 ½ digit, ± 1% Accuracy with LCD/LED alphanumeric display having 12mm numerical display height shall be provided on the front panel of the module/ on the DSA for measuring module output current.

E) Voltage monitoring point suitable for measurement by standard multimeter or through DSA.

F) Reset button for resetting the alarm as per clause 4.1.23.1

4.1.23.2 All the above indications may be derived on a microprocessor based control and supervisory unit and may be displayed on an LED / LCD type alphanumeric display.

4.1.24 **Terminations**

a) The AC input connection to the FRBC module shall be by means of plug and socket arrangement as per specification No. UL 248 & DIN 41576.

b) The DC output connection should be taken through irreversible plug and socket having power pins with locking arrangement.

c) The output of each FRBC in the positive lead shall be taken through the HRC fuse of 1.5 times of rated capacity of FRBC.

d) In all cases, the male connector shall be mounted in the FRBC module and the female connector shall terminate the cable.

e) To prevent hazards or damaging conditions, all plug-in components shall be non-interchangeable.

f) All the connections between DSA unit and FRBC shall be through proper rated cables only.

g) Circuit breakers at the input of each FRBC shall be easily accessible and rated to 25A for 110V/20A module.

h) Proper termination for AC at the input of the circuit breakers and its output to the FRBC.

4.2 **DISTRIBUTION/ SUPERVISORY CONTROL /ALARM (DSA) UNIT**

All the power plant racks shall be provided with a distribution/ supervisory control / alarm unit for the ultimate rack capacity as indicated in clause 1.1.

The unit shall comprise of the following:

a) Termination for the batteries.
b) Termination for the load (DC-DC converter & Inverters).
c) Termination for AC input to the rack.
d) Termination for AC and DC to FRBC modules.

4.2.1 **Accessibility**

4.2.1.1 The termination points shall be easily accessible from front or rear.

4.2.1.2 AC and DC terminals shall be separated by physical barriers to ensure safety.

4.2.1.3 All the terminals except AC earth shall be electrically isolated.

4.2.2 **AC termination arrangement**

4.2.2.1 The input terminals shall be clearly marked as L & N for mains supply voltages.

4.2.2.2 AC input termination shall be suitably protected against accidental touch/contact with the working staff for their protection and shall also have clear and prominent ôDANGERô Marking.

4.2.3 **DC terminations**

4.2.3.1 Connection between the FRBC and DC distributions shall be through a proper rated lugged cable.

4.2.3.2 The DC output to battery and load shall be through bus bar or cable.

a) Battery fuse shall be of 1.5 times of maximum current that passes to / from battery.
b) Fuse at the O/P of FRBC rack shall be of 1.5 times the designed O/P current required for the system.

4.2.3.4 All the AC, DC and Control/Alarm cabling shall be supplied with the rack.

4.2.3.5 All DC positive & negative terminals shall be clearly marked and shall be suitable for minimum 10 sq. mm cable size. All conductors shall be properly rated to prevent excessive heating.

4.2.4 **Alarms & Indication of DSA Unit**

4.2.4.1 **Status Indication:**

Description	Nomenclature	Indication
a) Mains available	MAINS	Amber
b) Mains fail	MAINS FAIL	Red

4.2.4.2 **Alarm Indication:**

Description	Nomenclature	Indication
a) Load voltage high	OUTPUT VOLT HIGH	Red
b) Mains out of range	MAINS VOLT LOW /HIGH	Red
c) System overload	OVERLOAD	Red
d) Mains on & battery discharging	MAINS ON & BATTERY ON LOAD	Red
e) Low voltage battery disconnection	BATTERY DISCHARGED & ISOLATED	Red
f) Battery / load fuse fail	FUSE FAIL	Red
g) Temperature compensation fail	TEMP. COMPENSATION FAIL	Red
h) Battery disconnected from circuit	BATTERY DISCONNECTED	Red

All the above indications may also be derived on a microprocessor based control and supervisory unit and may be displayed on an LED / LCD type alphanumeric display.

4.2.4.3 All alarm circuits shall be provided with suitable delay to ensure that they do not operate with transients.

4.2.4.4 All the protection/alarms shall be within tolerance of ± 0.012V per cell for voltage and ±1% in case of current.

4.2.4.5 Every alarm condition shall be accompanied with audio alarm with auto cut off after 120 seconds. Provision shall be made for stopping the audio alarm with a push button switch.

4.2.4.6 In case of any kind of failure in DSA unit, the SMRs shall switch over to float mode.

4.2.5 **Battery Health Monitoring**

4.2.5.1 **Battery Health Monitoring in Auto Mode**: To keep the battery in healthy state, the battery condition shall be continuously monitored. On restoration of AC mains after an interruption, depending on the battery condition sensed, the system shall change over to Auto Boost Mode to charge the battery at higher voltage of 2.3/2.42V/cell for VRLA /Low Maintenance battery respectively till the battery is fully charged. It shall come back to auto float mode as defined in clause 4.1.11.1.

4.2.5.2 **Battery Current Limiting Circuit:** To ensure the availability of required load connected and safety of the battery in auto mode, the battery charging current limit shall be settable (5 ï 15% of battery AH capacity) as per requirement.

4.2.5.3 **Battery under voltage isolation**: The system shall have provision for battery isolation using DC contactor. The battery isolation shall be effective at

i) For VRLA Battery: 1.80V/cell (± 0.012V/cell)
ii) For low maintenance lead acid battery: 1.85V/cell (± 0.012V/cell)
iii) Battery under voltage adjustment shall be provided inside the switching control unit/ DSA . This setting shall be adjustable from 1.80 to 2.0V/cell. Battery shall get reconnected after restoration of mains.

4.2.6 **Temperature Compensation for VRLA Battery**: There shall be provision for monitoring the temperature of battery and consequent arrangement for automatic temperature compensation of the FRBC output voltage to match the battery temperature dependent charge characteristics. Output voltage of the FRBC shall decrease or increase as per the type of the battery used by the purchaser. Failure of temperature compensation including sensor shall create an alarm and shall not lead to abnormal change in output voltage.

4.2.7 **Battery Reverse Polarity Protection**: Protection for battery reverse polarity shall be provided in the system. The reverse polarity indication shall be provided near the battery terminal.

4.2.8 The system configuration shall be made either with cable or bus bar. Bus bar of high conductivity electrolytic copper strips with purity of 99.9% as per BIS 613 latest issue and shall be able to withstand maximum load and battery current. The bus bar/cable sizes shall be sufficient to cater current density upto 2 Amps per sq.mm. The size of bus bar shall not be less than 25mm x 5mm in any case**.**

4.3 **INVERTER**

4.3.1 The inverter shall be of Pulse Width Modulation (PWM) type.

4.3.2 The inverter shall be protected against overload and short circuit with auto reset facility. Whenever the failure condition persists, it shall trip and restart automatically after about 10-20 seconds. But if the problem still persists, the protection shall permanently get latched and inverter shall not be switched ON again unless the fault is cleared followed by pressing of reset push button switch. Inverter overload indication shall appear at 110% of rated load.

4.3.3 Inverter shall be designed for continuous operation for an input voltage of 98V to 138V DC at a nominal of 110V DC, and shall be rated for an output of 230V AC.

4.3.4 The output of both the inverters shall be linked in such a way that on failure of one inverter, the other shall supply to load automatically within 60ms. As soon as one of inverter becomes healthy, the load shall be automatically transferred back to inverter. The change over from inverter to inverter or AVR shall be achieved through Static switch. The failure of any inverter shall be indicated using LED at appropriate common place.

4.3.5 The inverter shall be switched ON without any requirement of manual pre-charging and shall be suitable for on-line application.

4.3.6 The input & output of inverter shall be isolated from each other.

4.3.7 Each inverter shall be provided with suitable DC MCCB/MCB at the input for connecting the DC input.

4.3.8 The DC fan, if provided, should have MTBF better than 70,000 hours at 40ºC. The switching ON & OFF the fan shall be with temperature control.

4.3.9 The following LED indications shall be provided on front panel:

Description	Nomenclature	Indication
a) Input ON	Input DC ON	Amber
b) Output OK	OUTPUT	Green
c) Inverter fail	INVERTER FAIL	Red
d) Inverter ôON load'	ON LOAD	Green
e) Fan fail indication(In case of forced cooling)	FAN FAIL	Red

4.3.10 Voltage overshoot and under-shoot in the first cycle for complete load shut off shall be restricted to 20%.

4.3.11 The output voltage waveform shall be sine wave. Total harmonic distortion of the output shall not exceed 8% under any condition specified in clauses 4.3.14.

4.3.12 The no-load current at rated input voltage shall not exceed 10% of the full load input current.

4.3.13 The inverter shall be capable of delivering 125% of rated full load for a period of 24 hours. It should be capable of delivering 200% of the rated full load for a period of 300 ms in order to cater for the high in-rush current at the time of switching ôONô of the inverter.

4.3.14 The output of inverters shall be regulated to 230V ± 1% for an input variation of 98V-138V DC and for a simultaneous load variation of 25% to 125% of the rated capacity.

4.3.15 The overall watt efficiency of the inverter shall not be less than 85% at full load for the entire input range of 98V to 138V DC.

4.3.16 The unit shall be capable to withstand 20 cycles / hrs of 1.5 minute each ON and OFF at rated load.

4.3.17 Output voltage of inverter shall not exceed beyond 230 + 1% and frequency 50Hz ± 1Hz under any circumstances. Manufacturer shall submit fail-safety validation report in this regard by an approved assessor at the time of initial approval / any design change.

4.4 **Ferro-Resonant Type Automatic Voltage Regulator (AVR)**

4.4.1 The design of the Automatic Voltage Regulator shall cater for any load from no load to full load of its rated capacity.

4.4.2 The voltage regulator shall be completely static without any moving parts.

4.4.3 The AVR shall be suitably screened so that other electronic equipment placed side by side of the regulator is not affected by the electromagnetic radiation of the regulator.

4.4.4 The voltage regulator shall be of natural air-cooled type and shall be suitable for indoor use in the cabins where maximum ambient temperature can reach upto 50ºC.

4.4.5 The regulator shall function satisfactorily under shock and vibration conditions encountered by the side of railway track. Main transformer shall be mounted on anti vibrating padding.

4.4.6 AC Metal Can Capacitors of 600V rating of approved type with in-built wire shall only be used. The capacitors shall be mounted at a minimum distance of 2" away from the main transformerõs top plate with metal partition in between the transformer and capacitor. This partition shall be of heat insulating material as the purpose is to protect capacitors from heat.

4.4.7 The output tappings at 0, 220, 230& 240V shall be provided.

4.4.8 Transformers and inductors/ chokes used shall be vacuum impregnated and shall be of natural air-cooled type conforming IS: 6297 (Category 3 & Grade 2). Class F or higher grade insulating material as per IS:1271 and polyester enameled copper winding wire conforming to IS 13730(Pt. 3) shall be used for winding transformers and inductors/chokes. The gauge of winding wires shall be such that the current density shall not exceed 1.6A/sq.mm.

4.4.9 Two pole ON/OFF rotary switch conforming to IS: 4064 (Pt.I) shall be provided for input to the regulator.

4.4.10 A LED to indicate that the unit is ónô shall be provided on the front panel.

4.4.11 The output voltage shall remain at the nominal value of 230V± 1% at all the loads varying from 25% load to full load keeping the input voltage constant at 230V 50Hz.

4.4.12 The regulator shall work satisfactorily within supply frequency of 50Hz ± 2.5 Hz. The value of output voltage at rated load with an input of 230V at 50 Hz shall be taken as the reference output voltage for individual unit. When input frequency is varied from 47.5 Hz to 52.5 Hz, keeping the input voltage constant, the output voltage of the regulator unit shall be maintained within ± 3% of the reference output voltage for ± 1 Hz variation and within ±6% for ± 2 Hz frequency variation.

4.4.13 The regulator shall work satisfactorily within a range of 160V to 270V input at 50Hz mains supply. The output voltage shall be maintained within 230V ± 1% when the unit is connected to rated load.

4.4.14 The response time of regulator for sudden changes of 50 V AC input voltage or load variation from 25% to 75% of the rated load shall be such that the output voltage should settle at 230V ± 1% within 3 cycles/60m seconds.

4.4.15 The no load current shall not be more than 25% of the rated input current and the no load power shall not be more than 10% of the rated output power at nominal input voltage of 230V at 50Hz.

4.4.16 The overall watt efficiency shall not be less than 85%.

4.4.17 The total harmonic distortion measured at the output of the regulator shall not exceed 8% under any working conditions specified in Clauses 4.4.11, 4.4.12 & 4.4.13.

4.4.18 The voltage regulator shall be capable of handling any load from unit power factor to 0.8 lagging, without degrading total harmonic distortion and regulation.

4.4.19 When continuously operating at full load at any ambient condition specified in clause 2.3, the regulator shall withstand short-circuit on output side for one hour without any damage or deterioration to the regulator or any of its components.

4.4.20 The resonant voltage across the capacitor bank shall not exceed 480V at all input voltage and frequency conditions i.e 160-270V & 47.5Hz to 52.5Hz at no load.

4.4.21 Suitable surge voltage protection shall be incorporated in the circuit, preferably with high isolation between primary and secondary sides.

4.4.22 Ferro resonant voltage regulator for Signal load shall always be in ónô switched onôcondition and shall supply the load within 60 ms in case of any failure in Inverter/s and/or inverter changeover arrangement. As

soon as any one of Inverter becomes healthy, the load shall be automatically transferred back to inverter within 60ms. Using static switch.

4.4.23 In case of failure of contactor, provision shall be made for manual bypass of Static switch through a manual change over switch.

4.5 DC-DC CONVERTER

4.5.1 The DC/DC converter covered under this specification shall work satisfactorily meeting all the prescribed parameters as long as the DC input voltage is within 98V to 138V.

4.5.2 DC- DC converters shall be connected in the following order:

i) Relay internal
ii) Relay external
iii) Axle Counter
iv) Block local UP
v) Block Local DN
vi) Panel indication
vii) Block Line UP
viii) Block Line DN
ix) Block Tele UP
x) Block Tele DN

4.5.3 All components dissipating 3W or more power shall be mounted so that the body is not in contact with the board unless a clamp, heat sink or other means are used for proper heat dissipation.

4.5.4 Each converter shall be provided with a proper plug in arrangement for DC input & output. A toggle switch / push button switch shall be provided for switching ON/OFF the unit.

4.5.5 The converter shall be provided with means for protection and visual indication on front panel for the following:

Description	Nomenclature	Indication
i) Input Power ON indication	INPUT	Amber
ii) DC-DC Converter output OK	OUTPUT	Green
iii) DC-DC Converter fail	FAIL	Red

4.5.6 All modules except block Tele shall work on active load sharing basis without master /slave operation, Failure of any module shall not cause malfunction in other modules. The current sharing shall remain within ± 10% for 50% to 100% load.

4.5.7 The unit shall be provided with over-load protection, over-voltage protection and output short circuit protection with fold back characteristics. The over-load protection shall be effective at 105% and output short circuit protection shall be effective at 110% of the rated current.

The DC over voltage protection shall be auto tracking type. Over voltage trip shall be set at approximately 110% of the set output voltage. For example in a

24V-32V DC-DC Converter module if output is set at 25V, over voltage shall be set at 25x1.1=27.2 approximately and so on.

The output voltage settability of the converter shall be within the -2% of the minimum rated voltage and +2% of the maximum rated voltage of the converter.

4.5.8 The output shall be free from overshoot because of ñTurn on /Turn offò or power failure or when the battery charger is switched ON/OFF.

4.5.9 In case of failure of DC-DC converter the output voltage shall not exceed beyond pre-set value. Manufacturer shall submit fail-safety validation report in this regard by an approved assessor at the time of initial approval / any design change.

4.5.10 The no load input current shall not be more than 10% of the rated input current at maximum full load for all setting of output voltage and input voltage variation from 98V to 138V of nominal input voltage for DC-DC Converters of 50 VA and above.

4.5.11 The overall efficiency of the converter at full load shall not be less than 75% for converters rating from 50VA to less than 150VA at rated load and 80% for converters of 150VA or more rated output at 98V to 138V of nominal input voltage. . For converters of rating 10VA ï 50VA, overall efficiency shall be greater than 50%. The efficiency shall be measured at the maximum output voltage of the specified range.

4.5.12 Each DC-DC converters shall be of modular type which shall be fitted in main rack. The input and output connections shall be made using irreversible plug in connectors of appropriate rating.

4.5.13 The DC-DC converter of 12-40V, 1A for block line circuit has been catered in this specification, which will be suitable for double line block instrument. Purchaser may select the voltage range for other type of block instruments from any of the following ranges:

a) 40-60V
b) 60-100V
c) 100-150V

4.5.14 The DC-DC converter for relay internal and relay external is catered for 24V, 5A operated metal to carbon relays. For 60V operated metal to metal relay system, DC-DC converter shall be used in n+2 configuration for relay internal. Where ónôis the number of converters required to cater actual current requirement. Railway shall specify the rating of DC-DC converter as under:

Relay internal	60-66V, 5A (n+2)
Relay external	60-66V, 5 A (n+1)
Relay external	24-32V, 5A (n+1)

4.5.15 Whenever block proving by axle counter is used, the DC-DC converter of 24V-40V/5A or 10A shall be used in place of block line DC-DC converters.

4.5.16 Each converter shall be designed for an input voltage of 98V to 138V DC. The output regulation shall be ±1% of set value from 10% load to full load for the entire input range. DC-DC converter for block tele shall

work at input voltage range of 90-140 V DC. The regulation however shall be tested for 98-138V DC input variation.

4.5.17 Each DC-DC Converter shall be provided with voltage testing sockets on the front panel for the purpose of output voltage measurement in the common voltmeter using patch cords & jacks.

4.5.18 Each converter shall be provided with a precision type 10-turn potentiometer for adjusting the output voltage. This potentiometer shall be placed inside the DC-DC converter.

4.5.19 The output must be isolated from input.

4.5.20 Each DC-DC converter shall have blocking diodes at the output. The test points shall be provided before the blocking diode.

4.5.21 **Radio Frequency Interference Suppression**: The DC-DC Converter shall be designed to minimise the level of Electromagnetic interference (EMI/RFI), both conducted & radiated in the vicinity of DC-DC Converter. The radiated & conducted noise shall be within the limits specified in International Specification No.IEC CISPR 22 óÂô ~~EN-55022~~. The firm shall submit certificate to this effect from accredited national/international test house at the time of type test.

4.5.22 The converter shall have self-resetting type protection from over load/ short circuit of DC output.

4.5.23 The output ripple (peak to peak) of the converter shall not be more than 50mV at full load.

4.5.24 The psophometric noise for block line and block tele shall not be more than 4 mV.

4.6 **Step Down Transformer**

4.6.1 Terminals & associated screws shall be of nickel-plated brass, and shall be of the top screw pillar type, securely fixed.

4.6.2 The transformer shall be of double wound type and shall be designed for an input voltage of 230V ± 2%, 50Hz.

4.6.3 The transformer shall have separate input and output windings.

4.6.4 The primary of the transformer is 230V. The secondary winding shall have tappings at 0, 100, 110, 120 & 130 volts at no load.

4.6.5 The gauge of winding wires shall be such that current density does not exceed 2A/mm sq.

4.6.6 A rotary switch of 10A or above shall be provided for switching ON/OFF the transformer.

4.6.7 The size of the core shall be as small as possible commensurate with the electrical characteristics required by this specification.

4.6.8 The core of the transformer shall be such that its Electro-magnetic property will not be affected due to ageing.

4.6.9 The body of the core is required to be earthed and one earth terminal shall be provided for this purpose. Suitable marking shall be made near the earth terminal.

4.6.10 The efficiency of the transformer at rated load with nominal input shall not be less than 90%.

4.6.11 The appropriate voltage shall be legibly & indelibly engraved near the input and output terminals.

4.6.12 An HRC fuse of appropriate rating shall be provided at the input of transformer.

4.6.13 The following LED indications shall be provided on the front panel:

Description	Nomenclature	Indication
a) Input ON	INPUT	Amber
b) Output ON	OUTPUT	Green
c) Tx. Fail	FAIL	Red

4.6.14 230V AC at 50 Hz shall be applied on primary side between terminals ô0ô and ô230Vô and the voltages across different tappings on the secondary side shall be measured, which shall be within ± 1.5% of the nominal value.

4.6.15 The open circuit secondary voltage and the primary no load current of the transformer shall be measured with the primary winding connected to 230V, 50Hz supply and the secondary winding open circuited. The open circuit secondary voltage at different tappings of the secondary windings shall be within ± 1.5% of the nominal values. The primary no load current shall not exceed 10% of the rated full load primary current for all transformers.

4.6.16 The percentage voltage regulation shall not be more than 5%.

4.6.17 **Induced High Voltage Test: -** The transformer shall withstand without break down, when 440 volt 100 Hz AC is applied to the primary winding, with secondary winding open-circuited. The voltage shall be raised from one third of the maximum value to maximum value as rapidly as is consistent with accurate reading of the indicating instrument. The full test voltage shall be maintained for one minute and shall then be reduced to the one third of the value before being switched off. At the end of the test the transformer shall be tested for the following:

a) Insulation resistance (Clause 10.2)
b) Open circuit test (Clause 4.6.15)

4.6.18 The transformer shall withstand without any damage short circuit of secondary windings momentarily when primary is fed with 230V AC at terminals 0V and 230V. The test shall be carried out after bypassing the fuse.

4.6.19 Applied high voltage test as per clause 10.3 shall be repeated after short circuit test.

4.7 **Common Requirements of SMPS based FRBC Panel**

4.7.1 The following 3 ½ D digital meters with LED/ LCD display having 12mm numerical display shall be provided on top of the charger panel. The selector switch for meter shall not be at a height of more than 1800 mm from the ground.

a) AC Volt meter	0-300V	for AC input voltage
b) AC Ammeter	0-50A	for AC input current
c) DC Voltmeter	0-200V	for charger output voltage
d) DC Ammeter	0-50A	for charger output current/charge/ Discharge current.

A selector switch shall be provided for reading Total/ Charge / Discharge current.

4.7.2 The DC meters shall work even when the AC supply is not available.

4.7.3 All the above indications/measurements may be derived on a microprocessor based control and supervisory unit and may be displayed on an LED / LCD type alphanumeric display.

4.8 **Common Requirements of AC Distribution Panel (ACDP)**

4.8.1 AC digital volt meter (0-300V) of 3 ½ D with LED/ LCD display having 12mm numerical display shall be provided on the front panel with extendable cords for measurements of output voltages of the following:

a) Inverter 1
b) Inverter 2
c) AVR Signal
d) AVR Track
e) Tx. (Up) signal
f) Tx. (Dn) signal
g) Tx. (Up) track

4.8.2 All Digital ammeter 0-20A, with LCD/LED display having 12mm numerical display shall be provided for reading the total Signal load current at the output of inverter.

4.8.3 Output of Inverter, step down transformer & AVR shall be brought to one place at the rear of the cabinet. 30 Amp capacity TB type terminal capable of termination of 10-sq. mm cable shall be provided. Proper identification marking shall be provided on/near the terminals.

4.8.4 All the above indications/measurements may be derived on a microprocessor based control and supervisory unit and may be displayed on an LED / LCD type alphanumeric display.

4.9 Common Requirements of DC Distribution Panel (DCDP)

4.9.1 DC digital voltmeter of 3 ½ digit with LCD/LED display having 12mm numerical display height shall be provided on the front panel with extendable cords for measurements of output voltages of DC-DC converters.

4.9.2 Output of DC-DC converters shall be brought to one place at the rear of the cabinet. 30 Amp capacity TB type terminal capable of termination of 10-sq. mm cable shall be provided. Proper identification marking shall be provided on/near the terminals.

4.9.3 All the above indications/measurements may be derived on a microprocessor based control and supervisory unit and may be displayed on an LED / LCD type alphanumeric display.

4.10 Status Monitoring Panel

4.10.1 Status monitoring panel shall be installed in the room of ASM on duty. The panel shall have following LED indications and alarms with resetting switch:

	Instruction	Condition	LED Ind.	Remark
A	Run Gen set	50% DOD	RED	Audio / visual alarm. Alarm can be acknowledged for audio cut off.
B	Emergency start generator	60% DOD	RED	-do-
C	System shut down	70% DOD	RED	Signal feed cut off and all DC-DC converters to work. Audio alarm will continue till Generator is started.
D	Call S & T staff	Equipment fault	RED	Failure of any module or in case battery gets disconnected from circuit will give the alarm in panel. Alarm can be acknowledged for audio cut-off.
E	Stop Gen Set	FRBC change over to float mode	GREEN	Audio /Visual alarm

Audio alarm in case of A, B & C shall be of one type of tone and there shall be different tone for the case of D & E cases.

4.10.1.1 In A, B & C conditions, the visual LED indication will remain lit until fault is cleared or the DG set is started and battery is charged upto 110V i.e. 2V/cell as the case may be until reset push button is pressed. In case of D condition, if fault is not cleared, the LED will continue to glow, even if reset push button is pressed.

5.0 INDENTING DESCRIPTION / INFORMATION TO BE SUPPLIED BY THE PURCHASER:

Indenting description / information to be supplied by the Purchaser for the IPS system configuration covered under clause 2.2.1 is as under:

ñSupply, installation and commissioning of SMPS based integrated power supply system for Panel Interlocking/EI station in non-RE /RE area as per details given below-

SN	Details	Remarks
1	Configuration/ Applicable drawing No.	One of the configurations as per details given in clause 2.2.1 or configuration specified by the purchaser using standard modules (copy to be enclosed).
2	Type of Battery	Low Maintenance or VRLA
3	DC-DC converter for Axle Counter & EI	Required / Not required.
4	DC-DC converter for block line working	12-40V/1A or 40-100V/1A or 100-150V/1A
5	Type of Internal & External relays	24V (Metal to carbon) or 60V (Metal to metal)
6	DC-DC Converter (3 nos.) required as spares as per Annexure-IV.	
7	Distance between IPS Room & ASM Panel (in meters)	
8	Distance between IPS rack & battery (in meters)	
9	Whether installation is to be done by OEM	

6.0 LABELLING AND MARKING

6.1 Each electrical/solid state component should be possible to be located by the layout/circuit drawing. The wiring shall be clearly and permanently identified with a designation or a colour code, which corresponds to the equipment circuit diagram. Where non-standard colours are used, cable functions shall be clearly and permanently labelled at both ends.

6.2 A screen printed cabling / wiring diagram shall be placed on the inside of the front door or any other convenient place for ready reference of maintenance staff.

6.3 Screen-printed Do's & Don'ts, adjustment procedures and operating instructions shall be provided at convenient place on front panel of the IPS cabinets. One laminated block diagram shall also be provided at convenient place inside the cabinet.

6.4 The layout of the components and wiring shall be such that all parts are easily accessible for inspection, repairs and replacement.

6.5 All markings shall be legible and durable. Where the marking is by use of labels, they shall be metallic or screen-printed. These shall be firmly struck and shall not be capable of being removed by hand easily. They shall be placed in the vicinity of the components to which they refer.

6.6 All cubicles belonging to one IPS shall be identified with a common serial number.

6.7 Each cubicle shall be identified with the following appropriate name plates/labels:

i) SMPS IPS-AC distribution panel
ii) SMPS IPS-DC distribution panel
iii) SMPS IPS- SMPS based FRBC panel

6.8 Each FRBC, Inverter, AVR, DC-DC converter shall be marked with its name & rating on its front panel. The placement for particular module in respective rack shall be clearly marked with its application for the purpose of appropriate replacement.

6.9 Every SMPS based IPS shall be provided with a rating plate fixed outside at a conspicuous place in IPS cubicle. It shall be clearly and indelibly etched, engraved or screen printed and shall show the following minimum information:

a) Name and trade mark of the manufacturer
b) Specification No.
c) Nominal AC input voltage and frequency
d) Serial number and year of manufacturing.
e) Version number as per RDSO/SPN/144/2006.

6.10 All input and output terminals shall be clearly identified by using proper name tags/labels.

7.0 DOCUMENTATION

7.1 Two copies of the user's instruction manual shall be supplied along with each IPS unit. The version number shall be clearly indicated on front cover. The manual shall include detailed design of the IPS /modules, dimensional layout drawings, schematic diagrams, and detailed interconnecting drawing of all sub systems. Traceability of interconnection between racks and sub systems shall be ensured. Details on initial checks on receipt at site, testing and adjustment procedures, installation and commissioning procedures, maintenance procedures and detailed trouble shooting chart shall be covered in the manual. All the details in the manual shall be in simple language with trouble shooting explained through suitable pictures/ photographs in step by step manner so that it is well understood by the maintenance staff.

7.2 The instruction manual is to be prepared using good quality paper with clear crisp printing. All the drawings in clear printing shall be attached to the handbook binding. One set of flow chart drawings necessary for trouble shooting shall be provided with lamination with each manual. The handbook shall have a thick polythene sheet cover with plastic winding or comb winding.

7.3 The manufacturer shall submit certificate of the equipment for its satisfactory performance for 24 months from the date of commissioning. During the warranty period, any defect should be repaired free of cost.

7.4 The joint pre-commissioning checklist and post commissioning load measurements shall be a part of instruction manual. The system shall be commissioned, as per specification and representatives of manufacturer and purchaser/railways shall sign this jointly.

8.0 PACKING

8.1 Complete IPS shall be packed in suitable wooden boxes/crate, strong enough, without additional packing to prevent damage or loss to the unit

during transit. Loose space inside the box/crate shall be filled up with suitable packing material.

8.2 FRBC module, DC-DC converters, inverters, AVRs & Step down Transformers shall be separately packed. These shall be wrapped in bubble sheet and then packed in thermocole boxes and empty space shall be filled with suitable filling material. All modules shall be finally packed in wooden case of sufficient strength so that it can withstand bumps and jerks encountered in a road / rail journey.

8.3 Each box shall be legibly marked at one end with code numbers, contents, quantity and name of manufacturer/ supplier. The upside shall be indicated with an arrow. Boxes should have standard signages to indicate the correct position and precaution "Handle with Care" with necessary instructions.

9.0 TEST AND REQUIREMENTS

9.1 Inspection & tests shall be carried out to ensure that requirements of this specification are complied. All tests, unless otherwise specified, shall be carried out at ambient atmospheric conditions on all the modules of SMPS based IPS system. For inspection of material, relevant clauses of IRS: S 23 and RDSO/SPN/144/2004 shall apply unless otherwise specified.

9.2 **Initial type approval**:

Manufacturer shall furnish following information at the time of initial type approval of IPS system.

a) Details of protection provided and their effectiveness / proposed set values and range and working principle.
b) Bill of material for racks and modules. Details of semi conductors devices used and its specification and data sheets.
c) Safety margins in voltage, current, thermal (for junction temperature) along with the limit value for power devices, inductors and transformer etc.
d) Installation & commissioning manual, Quality Assurance Plan and Service manual (consisting of indications and fault diagnostics, Do's & Dont's etc.)
e) Design approach for the IPS system and salient features through which required MTBF has been achieved..

9.2.1 While granting initial type approval, it shall be ensured that the system conforms to all the clauses and passes all type tests as mentioned in clause 9.3.1and other relevant guidelines of RDSO.

9.3 **Maintenance type approval**

Before expiry of validity period, manufacturer shall submit prototype samples as per guidelines of RDSO. The IPS system must pass all type tests as per Clause 9.3.1.

In case of design changes, RDSO may call for fresh sample in the intermediate stage. In such cases, manufacturers shall submit all the information as per clause 9.2.

9.3.1 The following shall comprise the **Type Tests:**

a) Visual Inspection (Cl. 10.1)
b) Insulation Resistance (Cl. 10.2)
c) Applied high voltage test (Cl. 10.3)
d) Temperature rise test (Cl. 10.4)
e) Performance test (Cl. 10.5)
f) Test for protective devices (Cl. 10.6)
g) Environmental & Climatic Test (Cl.10.7)
h) Functional test (Cl. 10.8)
i) Vibration test on modules as per RDSO/SPN/144/2004.
j) Static discharge test as per RDSO/SPN/144/2004. Electrostatic discharge test shall be carried out as per international standard IEC 61000-4-2 or its equivalent with 150 Pico Farad charged capacitor of 7KV and should be discharged through 330 ohm resistor.

Note:
(i) Test for protective devices and performance test shall be carried out before and after climatic test. There shall not be any significant deviations in the observations recorded.
(ii) Vibration & Static discharge test shall be conducted on one module of FRBC along with DSA unit, ASM panel, Inverter and DC-DC Converter.

9.3.2 The following shall comprise the **Acceptance test**:

The acceptance test shall be carried out as per the sampling plan given in Clause in 11.0.

a) Visual Inspection (Cl. 10.1)
b) Insulation Resistance (Cl. 10.2)
c) Applied high voltage test (Cl. 10.3)
d) Temperature rise test (Cl. 10.4)
e) Performance test (Cl. 10.5)
f) Test for protective devices (Cl. 10.6)
g) Functional test (Cl. 10.8)

9.3.3 The following shall comprise the **Routine test**:

The routine test shall be carried out on every module of the IPS system and the results will be submitted by the manufacturer to the inspecting authority at the time of inspection.

a) Visual Inspection (Cl. 10.1)
b) Insulation Resistance (Cl. 10.2)
c) Applied high voltage test (Cl. 10.3)
d) Performance test (Cl. 10.5)
e) Test for protective devices (Cl. 10.6)
f) Functional test (Cl. 10.8)

10.0 TEST PROCEDURE

10.1 Visual Inspection

Test for visual inspection shall be carried out as per relevant clauses of this specification and RDSO/SPN/144/2004.

10.2 Insulation Resistance

Insulation resistance (I.R) test shall be carried out:
a) before the high voltage test
b) after the high voltage test
c) after climatic test

The measurement shall be made at a potential of not less than 500 V DC. The insulation resistance shall be measured at module level / rack as follows:

i) Input line terminals and the body of the equipment
ii) Output line terminals and the body of the equipment
iii) Input line terminals and output line terminals
iv) Between rack and earth

Value of the insulation resistance shall not be less than 10 M.ohm for the rack / equipment and 1000 M.ohm for the transformer/CVT when measured at a temperature of 40ºC and relative humidity of 60%. There shall not be appreciable change in the values measured before and after high voltage test and after the temperature rise test.

After completion of climatic test, the values shall not be less than 5 M.ohm for the equipment and 500 M.ohm for the transformer/CVT when measured at a temperature of 40ºC and relative humidity of 60%.

Note: - In case, temperature and humidity prevalent at the time of the above measurements of insulation resistance are different from those specified above, the values of I.R. shall be obtained from the table given below -

R.H	25ºC	30ºC	35ºC	40ºC
60%	>100 M.ohms	>100 M.ohms	>100 M.ohms	>100 M.ohms
65%	100 M.ohms	90 M.ohms	85 M.ohms	80 M.ohms
70%	80 M.Ohms	70 M.ohms	65 M.ohms	60 M.ohms
75%	60 M.ohms	53 M.ohms	47 M.ohms	43 M.ohms
80%	42 M.ohms	36 M.ohms	33 M.ohms	30 M.ohms
85%	29 M.ohms	25 M.ohms	22 M.ohms	18 M.ohms
90%	20 M.ohms	16 M.ohms	13 M.ohms	10 M.ohms
95%	15 M.ohms	10 M.ohms	7 M.ohms	5 M.ohms
100%	**10** M.ohms	6 M.ohms	3 M.ohms	1 M.ohms

10.3 Applied High Voltage test

The module shall withstand the application of 2000 V AC rms for one minute without puncture and arching. The test voltage shall be approximately sine wave

and of any frequency between 50 and 100 Hz. The high voltage shall be applied between the following:

a) Input and earth
b) Output and earth
c) Input and output

Note:
i) For FRBC, (b) above shall be tested at 1000V AC rms
ii) DC-DC Converter shall be tested for a), b) & c) at 1000V AC rms.
iii) The test shall be carried out after removing surge arrestors /MOVs or any other surge absorbing components.
iv) In routine test, only one module of each type shall be tested.

10.4 **Temperature rise test**

Temperature rise test should be logged during functional test of IPS after 8 hours, either with the help of thermo-couple or with resistance method on one module of each type.

10.4.1 While conducting the test with the help of thermo-couple, the temperature of MOSFET/IGBT, diode, Transformer/ Ferrite Transformer, choke, Internal ambient, Inside cabinet and outside cabinet shall be recorded at every one hour for first four hours and every half hour for next four hours. During this test, the temperature compensation probe shall be disconnected.

10.4.2 The temperature rise of heat dissipating components above the ambient measured directly and at heat sink shall not be more than

a) Transformer and chokes : 90°C
b) Thyristor & diodes : 40°C
c) IGBT/MOSFET : 30ºC

10.5 **Performance test**

10.5.1 Performance test for FRBC shall include following and other relevant clauses of this specification.

i) The FRBC shall be tested for its output performance (efficiency, power factor, harmonic distortion, psophometric noise and ripple voltage) at the AC input voltages 150V, 230V and 275V at different load currents by connecting a variable resistance load across the output terminals for the auto float mode and auto boost mode respectively.

ii) In auto float mode, readings shall be taken for float voltage setting of 2.15 V/cell & 2.25V/cell for low maintenance lead acid batteries & VRLA batteries, respectively at load current in the ranges 25% load to full load.

iii) In auto boost charger mode, readings shall be taken for boost voltage setting of 2.42V/cell & 2.3 V/cell for conventional lead acid batteries & VRLA batteries respectively at load current in the ranges 25% load to full load.

iv) During the performance test, the system shall fulfil the requirements of efficiency, power factor, psophometric noise, harmonic distortion, ripple voltage etc. as given under clauses 4.1 of this specification.
The test report from National /International test house of RFI/EMI shall be submitted by the manufacturer as per clause 4.1.20.

v) The current sharing of the module working in parallel shall be tested as per clause 4.1.21.2.

10.5.2 Performance test on DSA unit, Inverter, Ferro Resonant Voltage Regulator, DC-DC Converter and Step down Transformer shall be carried out as per clause no. 4.2, 4.3, 4.4, 4.5 & 4.6 respectively.

10.6 **Test for protective devices**:

10.6.1 Test for protective devices for FRBC shall include following and other relevant clauses of this specification.

i) Short circuit: During this test, system shall be connected to AC input voltage of 275V. Output terminals shall be short-circuited through a suitable arrangement. Steady short circuit current shall be measured. It should not exceed rated current + 5%. There shall not be any damage to charger. Working of over load/ short circuit indications/ alarms will also be checked on the FRBC. This shall be achieved by controlling output current and voltage under short circuit condition and not by switching off the input/ output voltage under short circuit condition.

ii) Reverse battery connection: A fully charged battery shall be connected in reverse polarity to output terminals of charger. There shall be no emission of smoke of undue temperature rise of any component of charger. Working of corresponding indication/ alarm shall also be checked.

iii) Other protection such as over voltage, battery under voltage, battery temperature compensation, battery current limit, input high & low voltage protection test shall be carried out as detailed as per clause 4.1.

10.6.2 Test for protective devices for DSA unit, Inverter, Ferro Resonant Voltage Regulator, DC-DC Converter and Step Down Transformer shall be carried out as per relevant clause of the specification.

10.7 **Environmental & Climatic test**

10.7.1 i) The Environmental & climatic tests shall be conducted on complete IPS system in integrated manner. Not more than 2 chambers shall be used for conducting the tests.

SN	Test	Reference	Severity
1	Change in temperature test	IS: 9000 Part XIV Section II	-10 ^{o}C to +70°C (as per indoor application of RDSO/SPN/ 165/2004)

SN	Test	Reference	Severity
3	Cold test	IS: 9000 Part II Section III	-10°C (as per indoor application of RDSO/SPN/ 165/2004)
4	Damp Heat test (Cyclic)	IS: 9000 Part V Section 1 & 2	Temperature 55° C and other conditions as per RDSO/SPN/144/2004 for indoor application.
5	Damp Heat (Storage)	IS:9000 Part IV	As per Indoor applications of RDSO/SPN/144/2004

ii) The climatic tests shall be carried out by setting the system in boost charge mode of operation. During the period of exposure in each test, the system shall be connected to supply mains of nominal input voltage and shall deliver the rated output voltage of 2.3V/ Cell or 2.4V/cell for VRLA/LM batteries respectively to a resistive load.

iii) During the exposure, the system shall be loaded as per load configuration given in clause 2.2.1 and output of the signalling transformer as well as DC-DC Converter shall be monitored at the end of every cycle.

10.7.2 Following tests shall be conducted on one module of FRBC, DSA unit, Inverter, Ferro Resonant AVR, DC-DC Converter, Transformer & ASM unit.

SN	Test	Reference	Severity
1	Salt Mist test	IS:9000 Part XI Procedure 3	As per Indoor applications of RDSO/SPN/144/2004
2	Dust test	IS: 9000 Part XII	As per Indoor applications of RDSO/SPN/144/2004

The performance of modules subjected to above tests shall be observed in IPS system.

10.7.3 Vibration test shall be conducted on FRBC, DSA unit, Inverter, DC-DC Converter & ASM unit as per RDSO/SPN/144/2004. The working of modules subjected for vibration test shall be observed with the IPS system.

10.8 **Overall functioning of IPS**

After above tests, overall functioning of IPS shall be checked as follows:

10.8.1 All sub systems shall be put on full load and with battery bank connected to the IPS. The overall functioning of IPS shall be observed for 72 hours during type test, 8 hours during acceptance test & 4 hours during routine test with frequent ON and OFF condition of AC Mains alternately, after every 30 minutes.

10.8.2 All the sub systems of IPS shall be connected. The output of all sub systems shall be checked. The switching over from mains to standby and vice versa of FRBC, inverters and DC-DC converters shall be checked. Switching over of Inverter & AVR shall also be checked. Indication of working and faulty condition of FRBC, inverters & DC-DC converters shall be checked.

10.8.3 All alarms and indications of ASM status monitoring panel shall be checked for its proper functioning.

11.0 SAMPLING PROCEDURE FOR ACCEPTANCE TEST

Visual inspection shall be carried out on one of the IPS unit of each type. The modules shall be tested for insulation resistance, high voltage test, temperature rise test, performance and protection tests as per the sampling plan given below:

Test Description	Ins. Res.	HV test	Temp rise	Performance test	Protection test
SMPS (FRBC)	N/2	N/2	N/2	N	N
Inverter	N/2	N/2	N/2	N	N
AVR	N/2	N/2	N/2	N	N
DC-DC Converter (of each type/ rating)	N/2	N/2	-	N	N
Transformer	N/2	N/2	N/2	N	N
Battery Bank -10 hrs discharge test for capacity: Sample shall be taken as per Clause 11.1 of IS: 8320-1982. Cells shall be taken from all banks of IPS.					

N = Denotes the no. of modules offered for inspection. N/2 shall be rounded off to the next number. In case of any failure during acceptance test, the lot shall be rejected.

****

Annexure-I

Details of Tools in toolkit with IPS

SN	Description of tools	Size	Make	Quantity
1	Double ended spanner	6-7, 8-9, 10-11 & 12-13	Taparia	01 each
2	Box spanner	6-7, 8-9, 10-11 & 12-13	Taparia	01 each
3	Screw driver set (05 pieces)	6ò	Taparia	01 set
4	Screw driver small/ aligner	--	Taparia	01
5	Screw driver big	12ò	Taparia	01
6	Cutting plier	6ò	Taparia	01
7	Nose plier	6ò	Taparia	01
8	Plier	6ò	Taparia	01

Annexure II-A

IPS for upto 4 lines without AFTC Non-RE Area

(SDO/IPS/PI-4L/NRE/001)

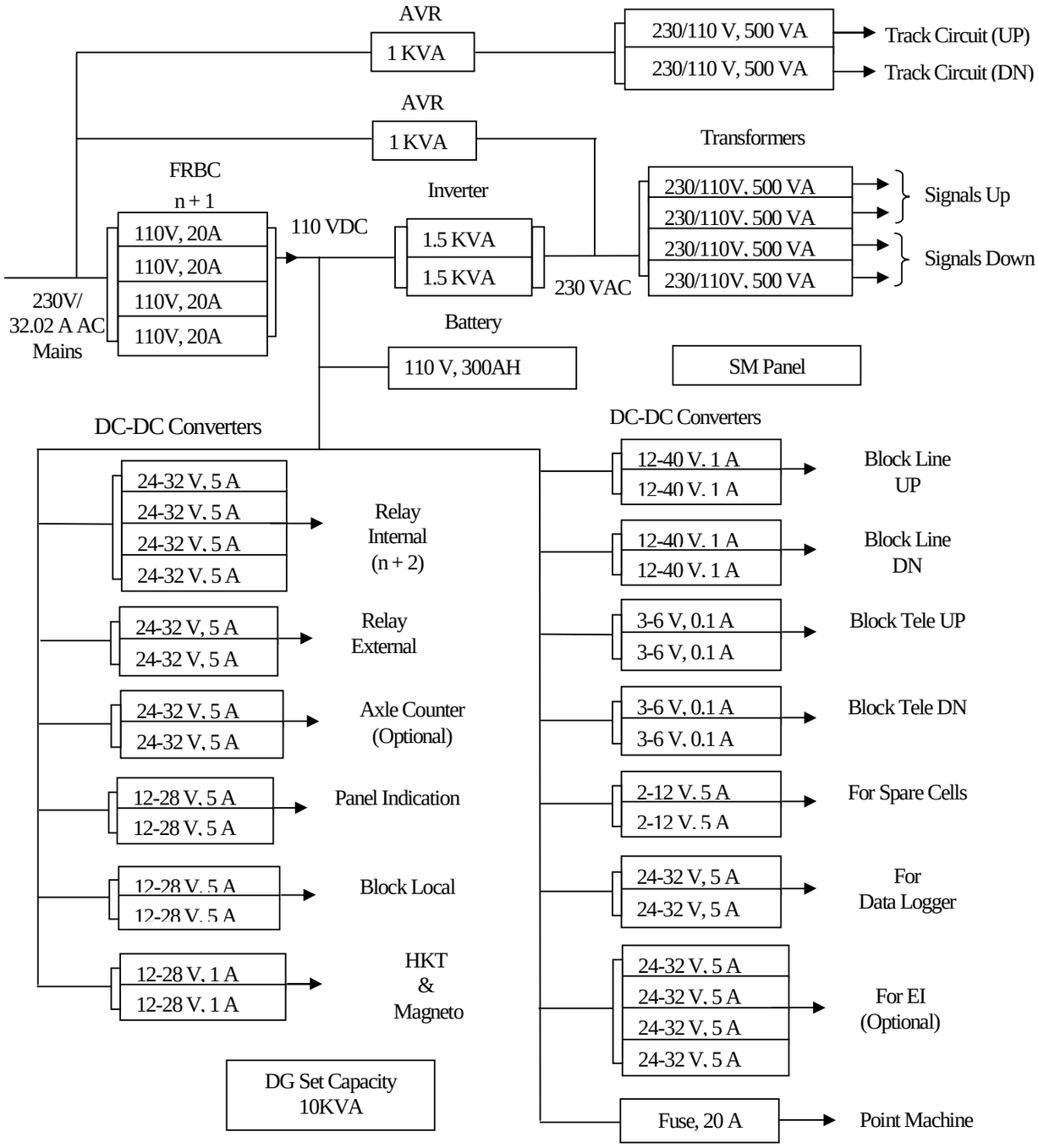

Note: i) For 60V metal to metal relay circuit, the rating of DC-DC Converter for relay internal and external shall be 60- 66V/5A.

ii) Depending upon type of block instrument, the DC-DC converter for block line may be taken as 12-40/1A or 40- 100V/1A or 100-150V/1A

iii) SMR shall be in n+1 configuration, DC-DC converter for internal circuit shall be in n+ 2 configuration & for other circuits in n+1 configuration.

Annexure II-B

IPS for upto 4 lines without AFTC RE Area
(SDO/IPS/PI-4L/RE/002)

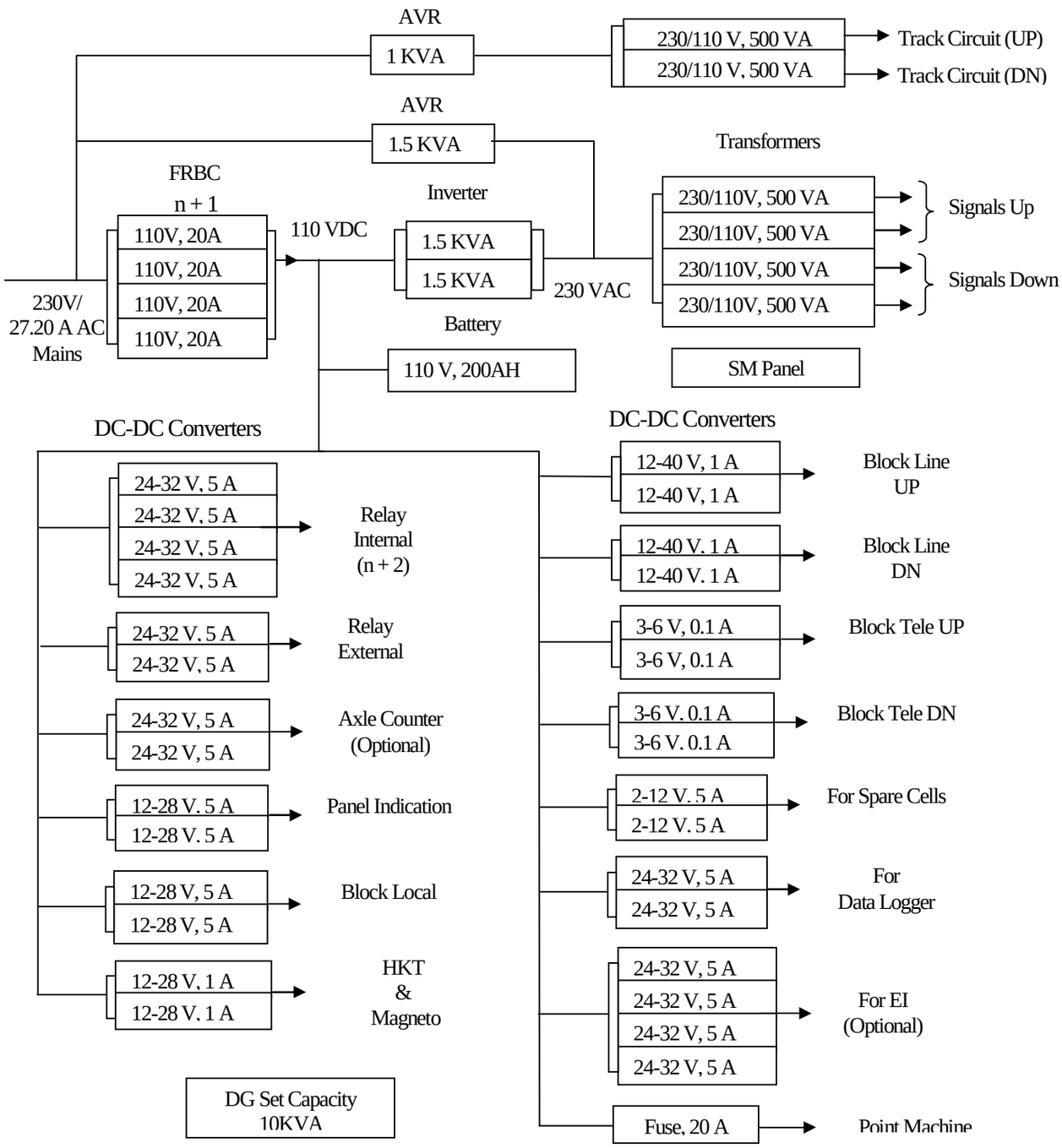

Note: i) For 60V metal to metal relay circuit, the rating of DC-DC Converter for relay internal and external shall be 60- 66V/5A

ii) Depending upon type of block instrument, the DC-DC converter for block line may be taken as 12-40/1A or 40-100V/1A or 100-150V/1A.

iii) SMR shall be in n+1 configuration, DC-DC converter for internal circuit shall be in n+ 2 configuration & for other circuits in n+1 configuration.

Annexure II-C

IPS for upto 6 lines without AFTC Non-RE Area

(SDO/IPS/PI-6L/NRE/003)

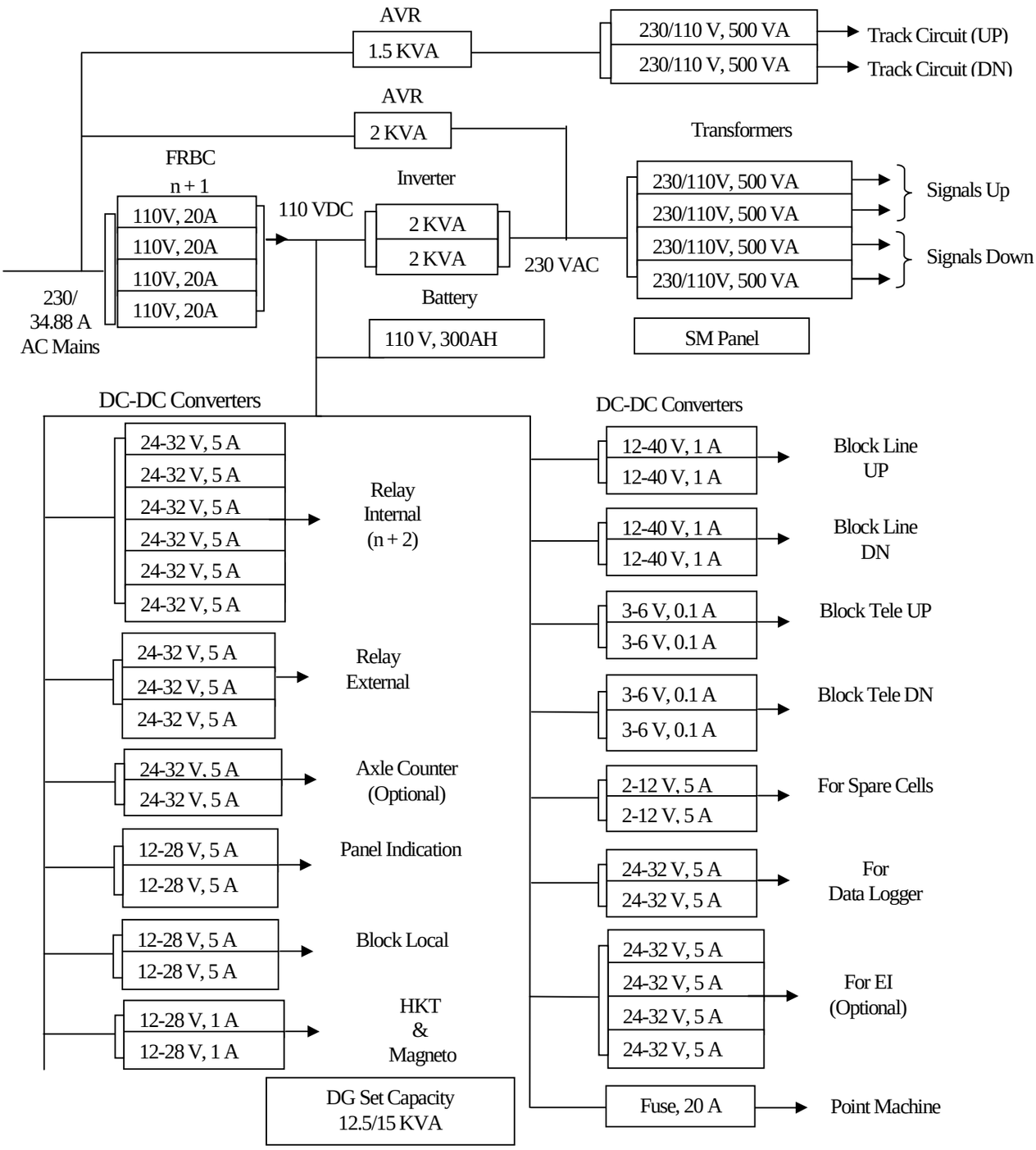

Note: i) For 60V metal to metal relay circuit, the rating of DC-DC Converter for relay internal and external shall be 60- 66V/5A

ii) Depending upon type of block instrument, the DC-DC converter for block line may be taken as 12-40/1A or 40- 100V/1A or 100-150V/1A

iii) SMR shall be in n+1 configuration, DC-DC converter for internal circuits shall be in n+ 2 configurations & for other circuits in n+1 configuration.

Annexure II-D

IPS for upto 6 lines without AFTC RE Area

(SDO/IPS/PI-6L/RE/004)

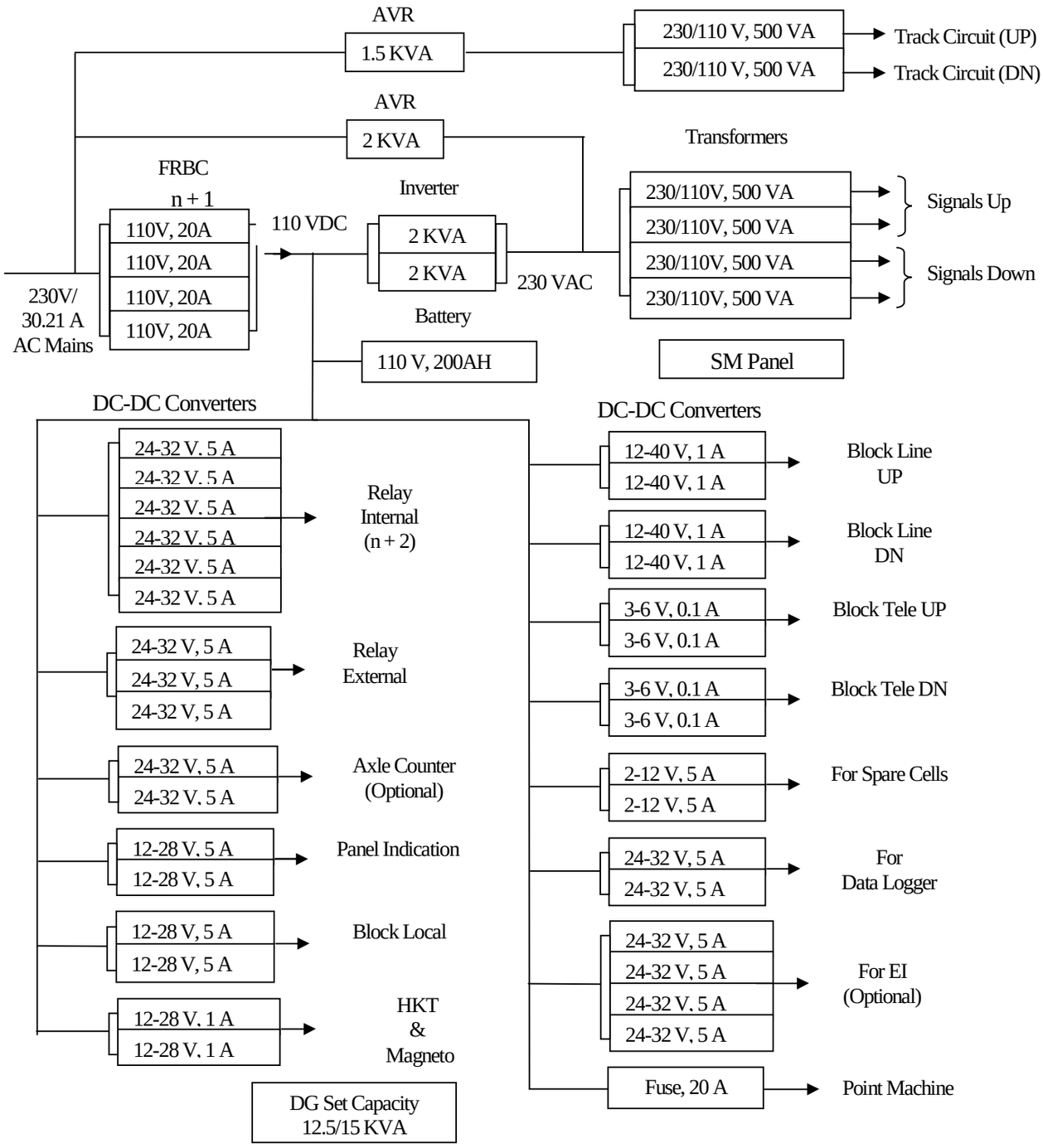

Note: i) For 60V metal to metal relay circuit, the rating of DC-DC Converter for relay internal and external shall be 60-66V/5A

ii) Depending upon type of block instrument, the DC-DC converter for block line may be taken as 12-40/1A or 40-100V/1A or 100-150V/1A

iii) SMR shall be in n+1 configuration, DC-DC converter for internal circuits shall be in n+ 2 configurations & for other circuits in n+1 configuration.

Annexure II-E1

IPS (INTERNAL) FOR MEDIUM SIZE STATIONS IN RE/NRE AREA

(SDO/IPS/PI-10L/005)

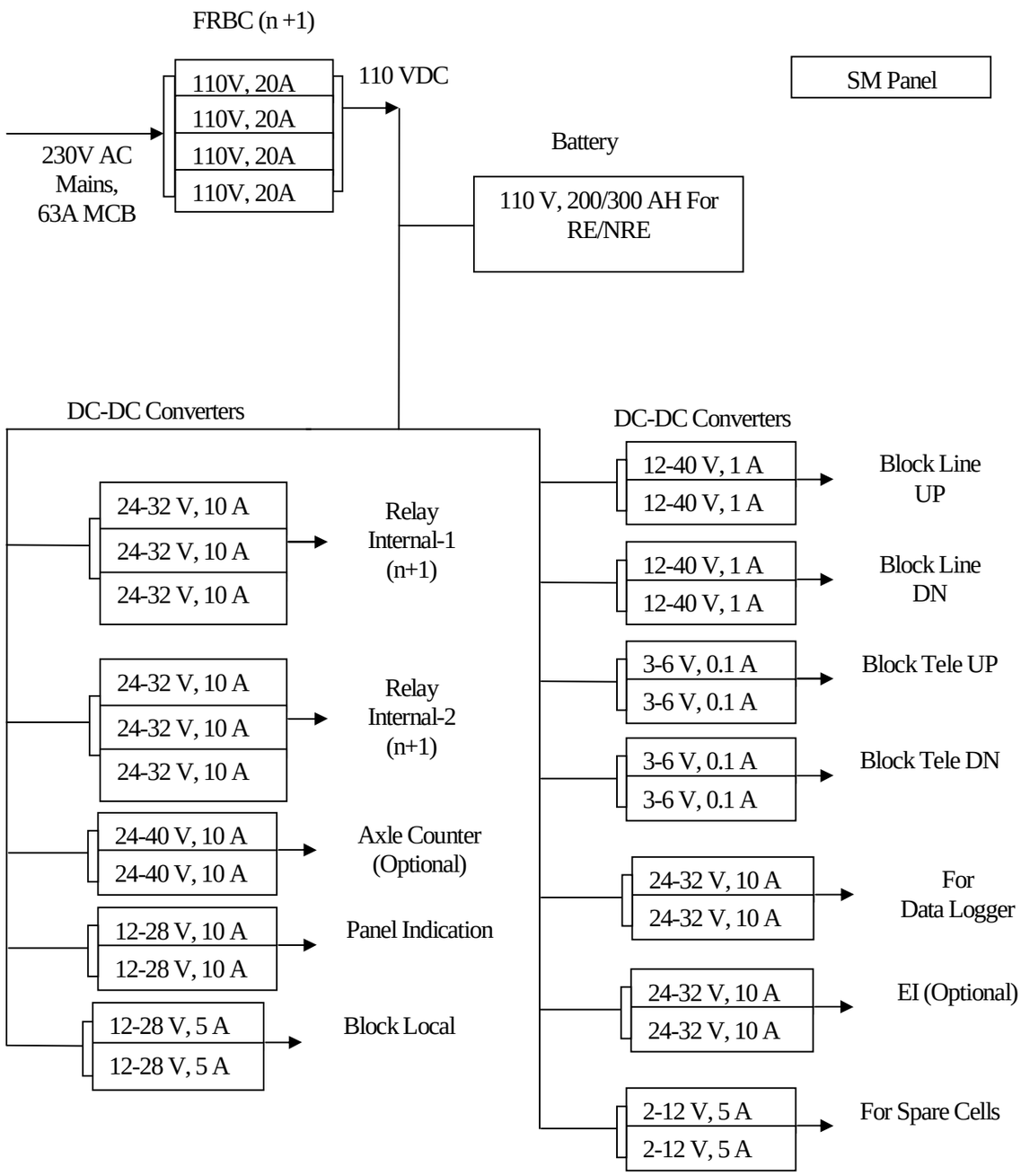

Note: i) For 60V metal to metal relay circuit, the rating of DC-DC Converter for relay internal and external shall be 60- 66V/5A

ii) Depending upon type of block instrument, the DC-DC converter for block line may be taken as 12-40/1A or 40- 100V/1A or 100-150V/1A

iii) SMR shall be in n+1 configuration, DC-DC converter for internal circuits shall be in n+ 2 configurations & for other circuits in n+1 configuration.

Annexure II-E2

IPS (EXTERNAL) FOR MEDIUM SIZE STATION IN RE/NRE AREA

(SDO/IPS/PI-10L/006)

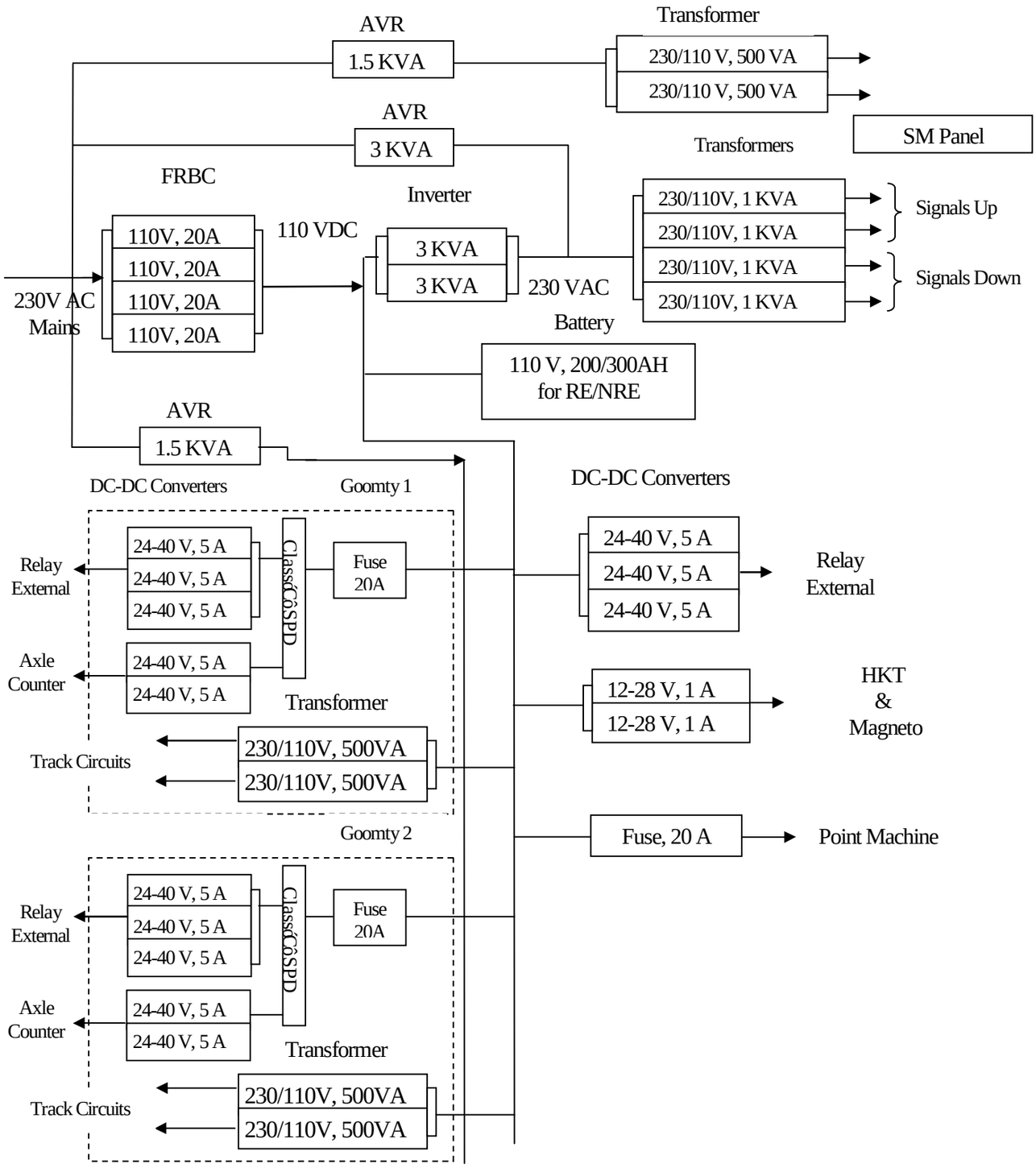

Note: i) In case goomty arrangement is not planned, rating of DC-DC converters for Relay External. AVR and Transformer for track circuits shall be suitably increased at central location in IPS (external)

ii) DG set capacity for medium size station shall be 20 KVA.

iii) SMR shall be in n+1 configuration, DC-DC converter shall be in n+ 1 configuration.

Annexure II-F

Power Supply arrangement with IPS for interlocked LC gate in RE/Non RE Area

(SDO/IPS/LC/007)

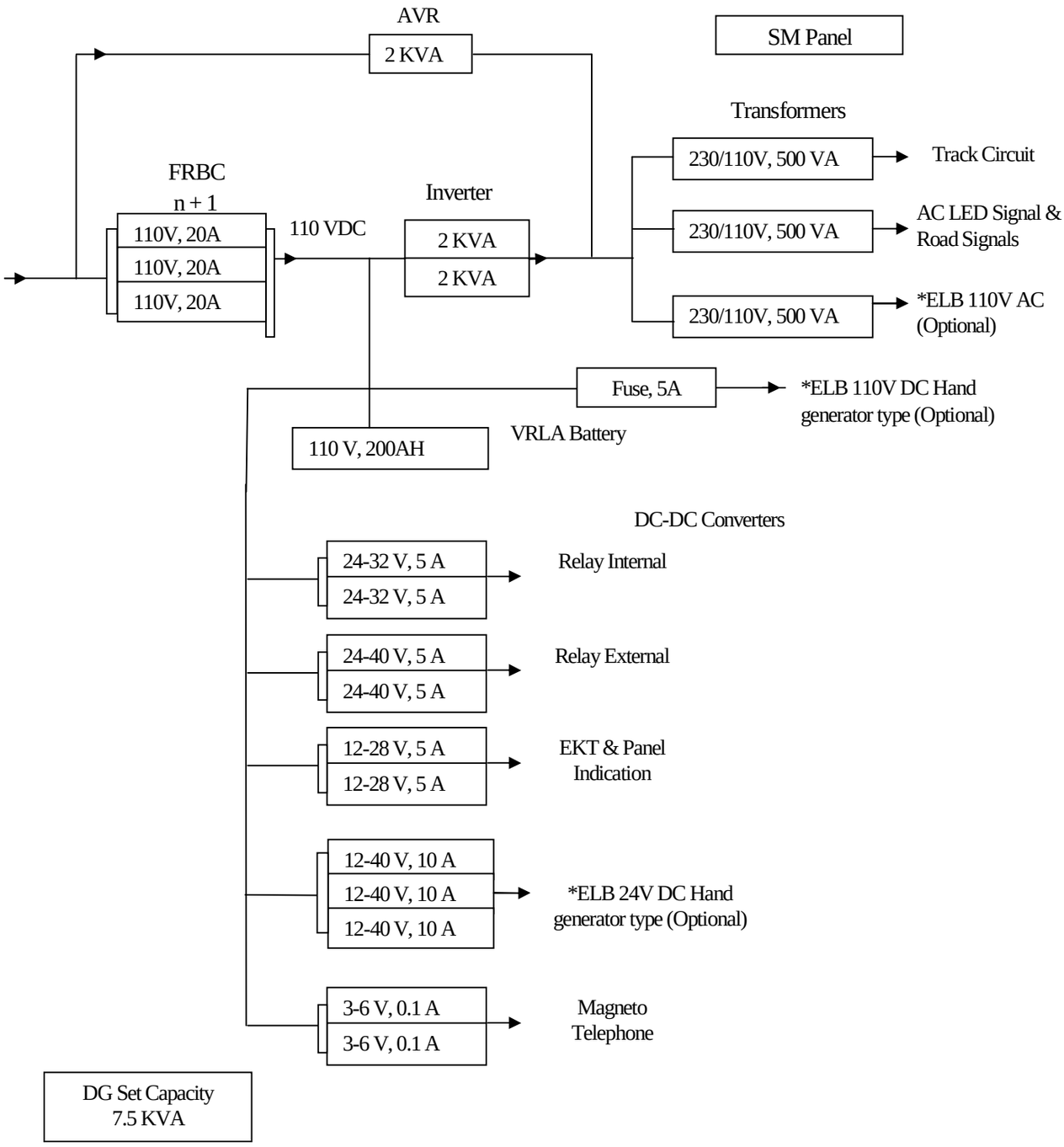

Note: * Only one type of ELB (24V DC/110 V DC/110 V AC) shall be used.

Annexure II-G

IPS configuration for IBS in RE/Non RE Area

(SDO/IPS/IBS/008)

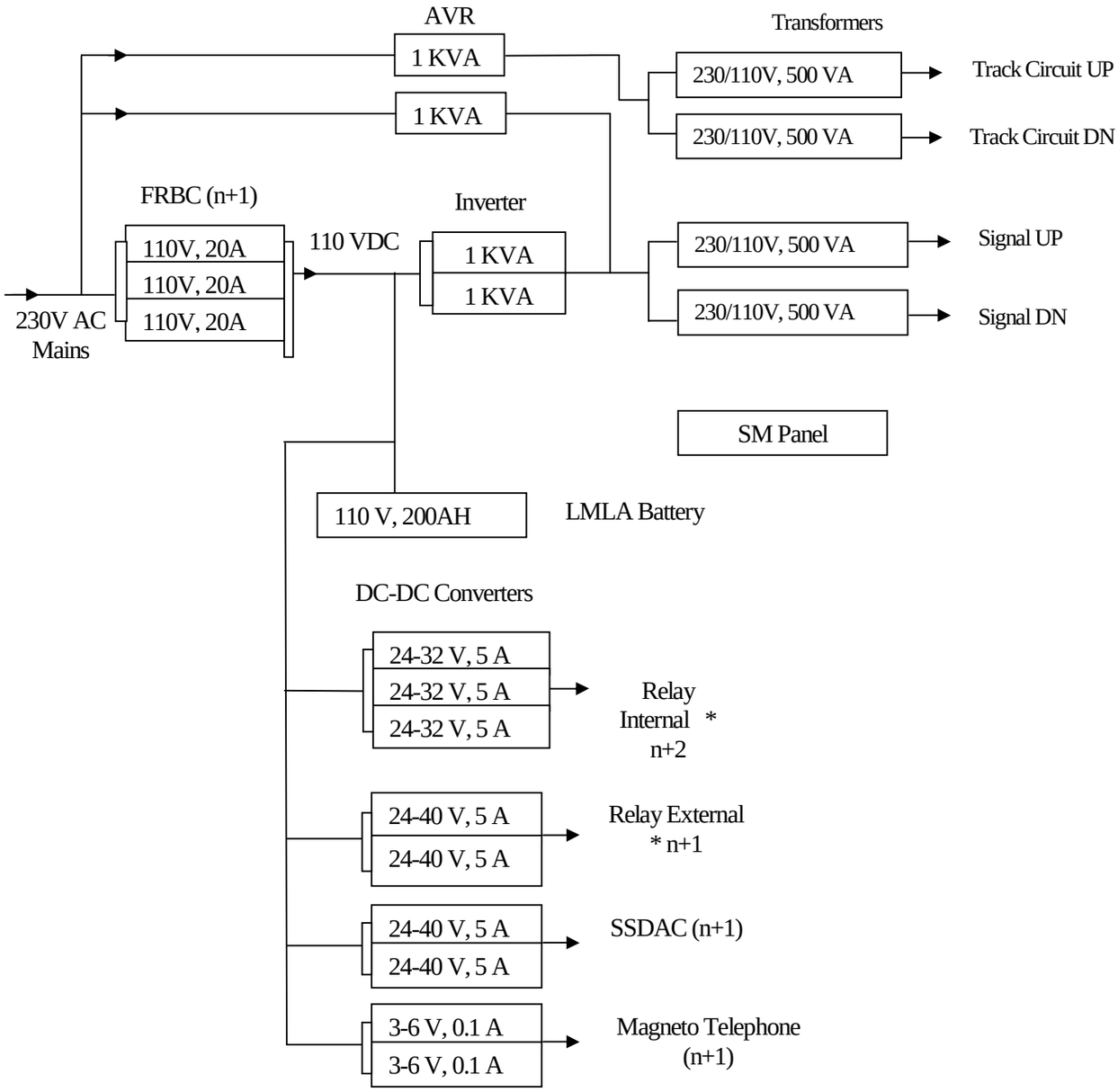

Note: * Wherever required 60-66V/5A DC-DC converter modules may be used instead of 24-32V/5A or 24-40V/5A depending upon Relay type.

Annexure III

DETAILS OF THE STANDARD MODULES FOR USE IN IPS

SMR	DC-DC Converter	Inverter	AVR	Transformer
110V/20A	24-32V/5A & 10A	1KVA	1KVA	500VA
	24-40V/5A & 10A	1.5KVA	1.5KVA	1KVA
	60-66V/5A (for metal to metal relays)	2KVA	2KVA	
	12-28V/5A & 10A	3KVA	3KVA	
	12-28V/1A			
	12-40V/5A & 10A			
	12-40V/1A 40-60V/1A 60-100V/1A 100-150V/1A 40-100V/1A (For Block circuit depending upon Block instrument)			
	2-12V/5A			
	3-6V/01.A			

****

ANNEXURE-IV

LIST OF SPARES TO BE SUPPLIED WITH IPS

SN	Sub system	Spare components	Qty
1	SMPS Charger Module	Module (as cold standby)	1 Module
2	Inverter Module	Module (as cold standby)	1 Module
3	DC-DC Converter	DC-DC Converter for relay internal, relay external and block line or as required by the purchaser.	1 module each
4.	Ferro-resonant type Automatic Voltage Regulator (AVR)	AC Capacitor	1 Set
5.	Fuses	All type of fuses used in IPS subsystem	1 Set
6.	Transformer	Module (as cold standby)	2 Modules
7.	Inverter/SMR	DC fan	2 Nos.
8.	Cells	2V Cells	5 Nos.

****

Annexure V

LAYOUT OF IPS CABINETS(SDO/IPS/Layout/001)

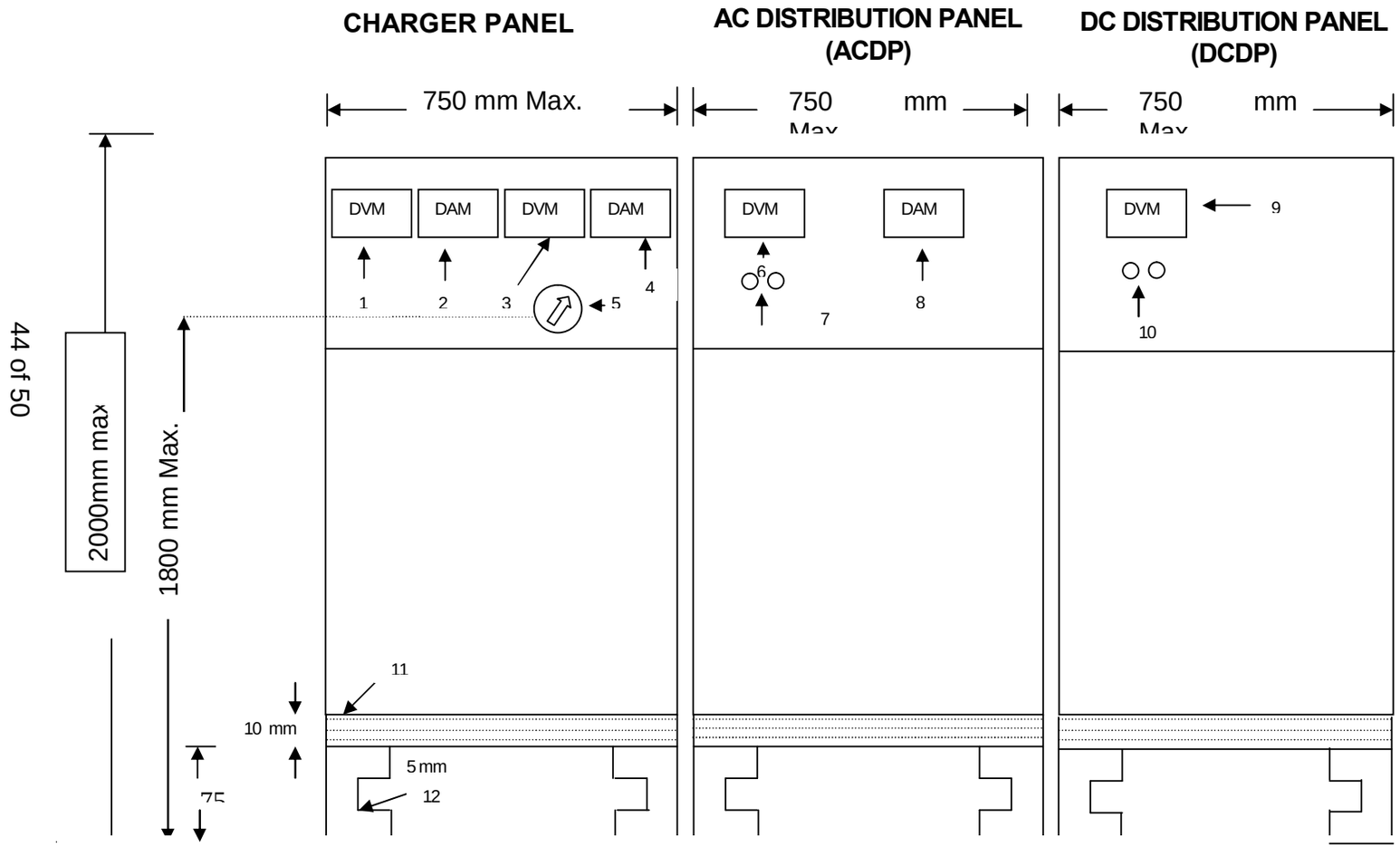

1. AC DVM (0-300V) for AC input voltage
2. AC DAM (0-50A) for AC input current
3. DC DVM (0-200V) for charger output voltage
4. DC DAM (0-50A) for Total/Charge/Discharge Current with Selector Switch.
5. Toggle type selector switch for selection of Total/Charge/Discharge Current
6. AC DVM (0-300V) for AC output voltage measurement of INVT/CVT/TX with Selector Switch
7. Test point for AC voltage measurement
8. AC DAM (20A) for signal load current.
9. DC DVM (0-150V) for DC-DC convertor output.
10. Test point for DC voltage measurement.
11. 10 mm thick anti vibrating pad
12. 75x5 mm bottom channel

NOTE:-

1. Dimension not to the scale.
2. DVM-Stands for Digital Voltmeter, DAM-Stands for Digital Ammeter.
3. Overall Dimension of IPS Cabinets = 2000 mm (Max.) X 750 mm (Max.) X 750 mm (Max.)
   (The height of all Cabinets should be equal and width of DC distribution panel may vary as per indentors requirement).
4. All the measuring meters are 3½ Digit, ± 3 count, ±1% Accuracy.
5. Selector Switch

ANNEXURE-VI

SOURCES OF COMPONENTS OTHER THAN SEMICONDUCTOR DEVICES FOR POWER SUPPLY EQUIPMENTS

(Annexure to letter no.STS/E/Component dt 24.11.09)

SN	Item	Manufacturer	Country	Indian Source
1.	MCB/MCCB	1) Merlin Gerlin (Telemecanique) 2) Siemens 3) Schneider 4) ABB 5) Indo Asian Fuse Gear 6) L&T (Hagger brand) 7) Legrand India	India India India India India India India	Authorised dealer Authorised dealer Authorised dealer Authorised dealer Indo Asian Fuse Gear, Sonepath L&T, Mumbai Legrand India, Mumbai
2	Terminal encapsulated type, DIN rail mounted(only for IPS & ELB)	1) Phoenix Contact, 2) Wago & Control 4) Connectwell 5) Weidmuller	Germany/India Germany/India India Germany	Phoenix/New Delhi Wago/Noida Connectwell/Dombivilli Weidmuller/Pune
3.	DC Contactor	1) ABB 2) Albright 3) Phoenix Contact 4) Andrew Yule 5) Telemecanique 6) Siemens 7) Sugi System and controls (Pownix brand) 8) L&T	India UK India India India India India India	APS Gurgaon Authorised dealer Authorised dealer Authorised dealer Authorised dealer Authorised dealer Sugi System and controls, Bangalore L&T, Mumbai
4	AC Contactor	1) Telemecanique 2) L&T 3) ABB 4) Siemens	India India India India	Authorised dealer L&T, Mumbai Authorised dealer Siemens, Mumbai
5.	Capacitors	1) Rescon 2) Alcon 3) Arcotronic 4) CTR 5) Keltron 6) Epcos AG 7) Vishay 8) Gujrat Poly- AVX Electronics 9) Nippon 10) Murata 11) Desai 12) Neotronics (El-Ci-Ar) 13) Filcon 14) INCAP	India India India India India Germany Germany India Japan Japan India India India India	Rescon, Pune Alcon, Nasik Authorised dealer CTR, Pune Keltron, Kerala Authorised dealer Authorised dealer Gujrat Poly- AVX Electronics Ltd, Pune Authorised dealer Authorised dealer Desai Engg, Pune Neotronics, Pune Filcon Electronic, Banglore Incap Ltd, Vijayawada

SOURCES OF COMPONENTS OTHER THAN SEMICONDUCTOR DEVICES FOR POWER SUPPLY EQUIPMENTS

(Annexure to letter no.STS/E/Component dt.24.11.09)

SN	Item	Manufacturer	Country	Indian Source
6.	AC Metal can Capacitor 600 V	1) Syscap 2) Sharda 3) Asian 4) Epcos AG	India India India Germany	Syscap IEE Enterprises, New Delhi Asian, Mumbai Authorised dealer
7.	Resistors	1) Thermax 2) Baychelog 3) Sreeton 4) PEC 5) Watts 6) Vishay 7) Variturrn 8) Kusum	India Germany India India India Germany India India	Thermax, Pune Authorised dealer Authorised dealer Authorised dealer Watts, Cochin Authorised dealer Variturrn Electro Products, Hyderabad Kusum Enterprises, New delhi.

Note: i) Sources approved as per RDSOôs approved list of suppliers for S&T items are automatically approved for the items included therein for use in Power supply equipment.

ii) Sources for various other items already approved and covered in QAP of various firms of Power supply equipment shall continue.

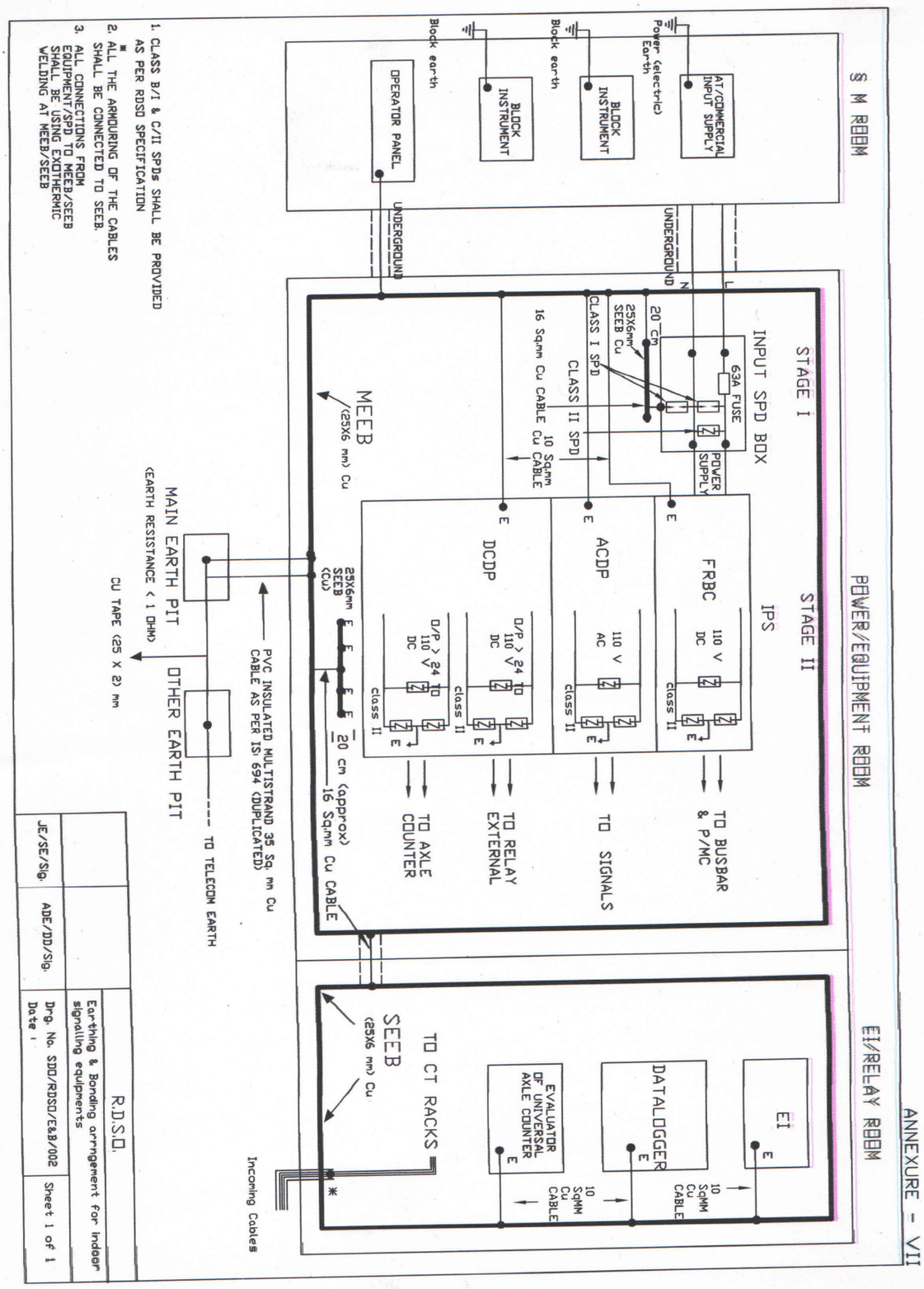
ANNEXURE - VII
S M ROOM
AT/COMMERCIAL INPUT SUPPLY
Power (electric) Earth
BLOCK INSTRUMENT
Block earth
BLOCK INSTRUMENT
Block earth
OPERATOR PANEL
UNDERGROUND
POWER/EQUIPMENT ROOM
STAGE I
INPUT SPD BOX
63A FUSE
POWER SUPPLY
20 cm
25X6mm SEEB Cu
CLASS I SPD
CLASS II SPD
16 Sqmm Cu CABLE
10 Sqmm Cu CABLE
MEEB
(25X6 mm) Cu
STAGE II
IPS
FRBC
110 V DC
class II
ACDP
110 V AC
class II
DCDP
D/P > 24 110 V DC
class II
D/P > 24 110 V DC
class II
TO BUSBAR & P/MC
TO SIGNALS
TO RELAY EXTERNAL
TO AXLE COUNTER
MAIN EARTH PIT
(EARTH RESISTANCE < 1 OHM)
OTHER EARTH PIT
CU TAPE (25 X 2) mm
PVC INSULATED MULTISTRAND 35 Sq. mm Cu CABLE AS PER IS: 694 (DUPLICATED)
25X6mm SEEB (Cu)
20 cm (approx)
16 Sqmm Cu CABLE
TO TELECOM EARTH
EI/RELAY ROOM
EI
DATALOGGER
10 SqMM Cu CABLE
EVALUATOR OF UNIVERSAL AXLE COUNTER
TO CT RACKS
SEEB
(25X6 mm) Cu
Incoming Cables
1. CLASS B/I & C/II SPDs SHALL BE PROVIDED AS PER RDSO SPECIFICATION
2. * ALL THE ARMOURING OF THE CABLES SHALL BE CONNECTED TO SEEB.
3. ALL CONNECTIONS FROM EQUIPMENT/SPD TO MEEB/SEEB SHALL BE USING EXOTHERMIC WELDING AT MEEB/SEEB
R.D.S.O.
Earthing & Bonding arrangement for indoor signalling equipments
Drg. No. SDD/RDSO/E&B/002
Sheet 1 of 1
Date :
JE/SE/Sig.
ADE/DD/Sig.